e.h.price

ONTARIO

STOCK BOOK

London · Cambridge · Hamilton · Toronto · Oshawa · Ottawa

EFFECTIVE: December 1, 2010
REPLACES: March 1, 2009

www.**ehpricesales**.com

Product	Description	Page #
EH Price Grilles, Registers & Diffusers		
RCDE	Round Cone Diffuser	1
RCDA	Adjustable Round Cone Diffuser	1
SCD	Square Cone Diffuser	2
SPF	Drywall Frame	2
SPD	Square Plaque Diffuser	3
SCDA	Adjustable Square Cone Diffuser	4
Diffuser Accessories	Dampers, Equalizing Grid	4
520D	Double Deflection Louvered Supply Grille w/Damper	5
530	Single Deflection Fixed Blade Louvered Return Grille	6
80, 80D	Egg Crate Return Grille	7-8
PDN	Perforated Supply Ceiling Diffuser	9
AMDE	Aluminum Modular Diffuser	9
ATG1	Aluminum Transfer / Door Grille	10
SDS475	4-Way Architectural Slot Diffuser	10
SDS	Linear Slot Diffuser	11
TBD3100	T-Bar Diffuser	12
LTA	Light Troffer Diffuser	13
VPD-HC / VPD-C	Varitherm	14
EH Price Terminal Units		
SPV8000	Single Duct Terminal Unit c/w Pneumatic Controls	15
SDV5000	Single Duct Terminal Unit (No Controls)	15
CP101 & CSC-3011	Pneumatic Controller	15
SEV & DDC	Electric Controls	15
ATT-3	Attenuator	16
Heating Coil		16
FDC5000	Fan Powered Terminal Unit	17
LGB	Single Duct By-Pass Terminal Unit	18-20
Fans & Ventilation		
FV Series	Panasonic Whisper Ceiling Fan	21
LX70, 90, 110	Lexton Ceiling Fan	22
LQF 140, 160	Lexton Ceiling Fan	23
EZM 50, 70	Lexton Ceiling/Wall Fan	24
EZ 90, 110	Lexton Ceiling/Wall Fan	25
XTI 200	Lexton Dual Intake Inline	26
XTF	Lexton Dryer Booster Fan	27
FS, AP	Lexton Pressure Switch & AMP Sensor	28
SP	Greenheck Ceiling Exhaust Fan	29-31
CSP	Greenheck Cabinet Exhaust Fan	32-33
WL ,WC, RFC, RDC, SSC, CK	Greenheck SP & CSP Accessories	34
G	Greenheck Direct Drive Roof Exhaust Fan	35-36
GB	Greenheck Belt Driven Roof Exhaust Fan	37-39
CUBE	Greenheck Belt Driven Roof Upblast Exhaust Fan	40
GPI, VCE	Greenheck Prefab Roof Curb and Curb Extension	41
CW	Greenheck Direct Drive Sidewall Exhaust Fan	42-43
CWB	Greenheck Belt Driven Sidewall Exhaust Fan	44
SQ	Greenheck Direct Drive Inline Fan	45-46

Product	Description	Page #
BSQ	Greenheck Belt Driven Inline Fan	47-48
SE1	Greenheck Direct Drive Sidewall Propeller Fan	49
WD	Greenheck Backdraft Damper	50
MP	Greenheck Motor Pack	51
Kitchen Ventilation		
Type I & Type II	Greenheck Kitchen Hoods	52-53
Energy Recovery		
ERV	Greenheck Energy Recovery Ventilators	54-55
MiniVent 450 & 750	Greenheck Energy Recovery Ventilators	55
Make-Up Air Systems		
DGK, DG & DGX	Direct Fired Gas	56-57
IG & IGX	Indirect Fired Gas	58-59
Ceiling Cabinet & Inline Exhausters		
BDF	Ceiling Exhaust Belt Drive	60
SAF	Supply Air Fan	61-62
Dampers		
ICD-45	Insulated Control Damper	63
MBD-10 & 10 M	Single Blade	63
MBD-15	Multi Blade	63
MBDR-50	Round Blade	63
EH Price Louvers		
MA609X	Architectural Blade Louver	64
MA6774X	Drainable Blade Louver	65
EH Price Fire Dampers		
FD	Curtain Type Fire Dampers	66
CDRD & CFS	Ceiling Fire Stop Flaps	67
Thermal Blankets		67
Access Doors		
Oval Access Doors		68
Spring Isolators		
SHAB	Mason Light Duty Spring Isolators	69
SH	Mason Spring Isolators	69
Gas Detection		
E3 Point	Vulcain Gas Detection Systems	70

Product	Description	Page #
Grease/Pollution Control Exhauster		
APU	Carroll Ecology Unit	73
Building Automation Starters		
Cerus	Cerus SIngle Phase and Three Phase Starters	74

Toronto Sales now supplies Peppertree Flex Products. Please ask your sales representative for our Peppertree Product Catalogue.

RCDE - 2 Position

Size	CFM NC 25	CFM NC 30	CFM NC 35	NC 30 Radius of Diffusion VT = 100	NC 30 S.P. Horizontal Position
6	175	200	235	6	.10
8	240	275	325	7	.09
10	425	490	580	9	.09
12	610	705	805	11	.08
14	680	800	930	12	.10

RCDE/B12
2 Position
Round Cone Diffuser

Performance Notes:

1. Radius of diffusion shown in feet, based on horizontal air pattern and 20°F cooling differential.
2. S.P. shown in inches of water.

Dimensional Data — Imperial (inches) / Metric (mm)

Nominal Size	A	B	D	E	F
6	11 1/8 (283)	6 1/2 (165)	6 (152)	1 3/4 (45)	1 1/8 (29)
8	14 3/4 (375)	8 1/2 (216)	8 (203)	2 1/8 (54)	1 1/2 (38)
10	18 1/4 (464)	10 1/2 (267)	10 (254)	2 7/8 (73)	2 1/8 (54)
12	22 (559)	12 1/2 (318)	12 (305)	3 1/8 (79)	2 3/8 (60)
14	26 (660)	14 1/2 (368)	14 (356)	3 3/4 (86)	2 5/8 (67)

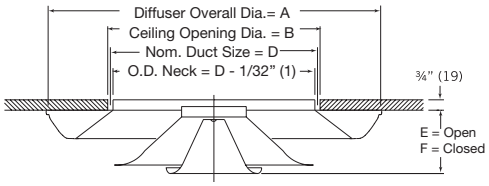

RCDA - Adjustable

Size	CFM NC 25	CFM NC 30	CFM NC 35	NC 30 Radius of Diffusion VT = 100	NC 30 S.P. Horizontal Position
6	165	195	228	5	.07
8	275	325	385	6	.06
10	415	490	580	8	.06
12	590	685	810	9	.06
14	770	880	1060	10	.05
16	980	1155	1365	11	.05

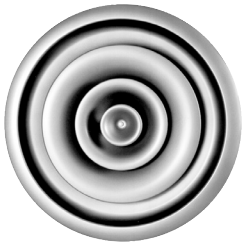

RCDA/B12
Adjustable Round
Cone Diffuser

Performance Notes:

1. Radius of diffusion shown in feet, based on horizontal air pattern and 20°F cooling differential.
2. S.P. shown in inches of water.

Dimensional Data — Imperial (inches) / Metric (mm)

Nominal Size	A	B	C	D	E	F
6	13 1/2 (343)	12 (305)	1 5/8 (41)	6 (44)	1 3/4 (44)	15/16 (24)
8	18 (457)	16 (406)	2 1/8 (54)	8 (56)	2 3/16 (56)	1 3/16 (30)
10	22 1/2 (572)	20 (508)	2 5/8 (67)	10 (68)	2 11/16 (68)	1 7/16 (37)
12	27 (686)	24 (610)	3 1/4 (83)	12 (79)	3 1/8 (79)	1 5/8 (41)
14	31 1/2 (800)	28 (711)	3 3/4 (95)	14 (100)	3 15/16 (100)	1 15/16 (49)
16	36 (914)	32 (813)	4 1/4 (108)	16 (108)	4 1/4 (108)	2 1/4 (57)

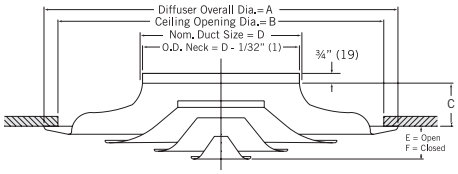

SCD - Round Neck

Square Ceiling Diffuser
Still one of the most efficient diffusers for any ceiling application! Ideal for VAV applications! Specially designed to eliminate the causes of ceiling smudging and streaking.

	SCD/31 T-Bar (Metric)	CFM			NC 30	
	20x20	NC 25	NC 30	NC 35	VT=50	S.P.
4"		122	145	173	6	.06
5"		163	190	220	8	.07
6"		209	243	289	8	.08
8"		305	361	419	11	.13
6"	•	189	230	274	6	.05
8"	•	314	377	454	8	.05
10"	•	464	545	654	8	.07

SCD/31/24x24/B12
Square Cone Diffusers

SCD/31/20x20/B12
Square Cone Diffusers -
20 x 20 Full Face Model

Performance Notes:

1. Throw data based on supply air and room air being at isothermal conditions.
2. S.P. shown in inches of water

SPF - Drywall Frame for Access into Ceiling

24 x 24 Ceiling Diffusers and Registers

12 x 12	24 x 24
20 x 20	

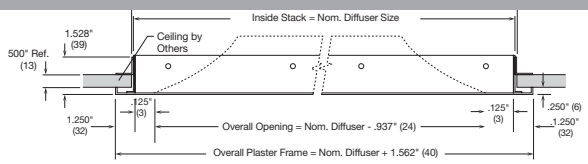

SPD DIFFUSERS:

Price SPD Series square plaque diffuser satisfies both architectural appeal and engineering performance criteria. Simple, clean and unobtrusive face design is intended to blend with most ceiling systems.

- Heavy gauge steel construction.
- Face panel has smooth edges and rounded off corners to blend with back cone.
- Back cone is one piece die-formed with smooth, aerodynamically designed surfaces and no corner joints.
- Helps prevent ceiling smudging.
- The back cone shape combines with the face panel to deliver a tight, 360° radial horizontal air pattern.
- Face panel is easily installed and removed without special tools.
- Maintains true horizontal air pattern even at low air volumes making it excellent for VAV applications.

SPD/31/24x24/B12
Square Plaque Diffusers - 24 x 24 Full Face Model

Performance Data – 24 x 24 (600 x 600) Face Size

Listed Size	Neck Velocity, fpm	400	500	600	700	800	900	1000	1200	1400	1600
	Velocity Pressure, in w.g.	.010	.016	.022	.031	.040	.050	.062	.090	.122	.160
6	Total Pressure, in w.g.	.010	.016	.023	.032	.041	.053	.065	.093	.127	.166
	Flow Rate, cfm	78	98	118	137	157	176	196	235	274	314
	NC	—	—	—	—	—	19	22	29	34	38
	Throw 150, 100, 50	1-2-4	1-2-4	2-3-5	2-3-6	2-4-6	3-4-7	3-4-7	4-5-8	4-6-9	5-7-9
8	Total Pressure, in w.g.	.018	.029	.042.	.057	.074	.093	.115	.166	.226	.295
	Flow Rate, cfm	140	175	209	244	279	314	349	419	489	558
	NC	—	—	—	—	19	23	27	33	38	43
	Throw 150, 100, 50	2-2-5	2-3-6	2-4-7	3-4-8	3-5-9	4-6-9	4-6-10	5-7-11	6-8-12	7-9-12
10	Total Pressure, in w.g.	.029	.045	.065	.088	.115	.146	.180	.259	.353	.461
	Flow Rate, cfm	218	273	327	382	436	491	545	654	763	872
	NC	—	—	—	18	22	26	30	36	41	46
	Throw 150, 100, 50	2-3-6	3-4-8	3-5-9	4-6-10	4-6-11	5-7-12	5-8-12	6-9-13	8-10-14	9-11-15
12	Total Pressure, in w.g.	.041	.065	.093	.127	.166	.210	.259	.373	.508	.664
	Flow Rate, cfm	314	393	471	550	628	707	785	942	1099	1256
	NC	—	—	—	21	25	29	33	39	44	49
	Throw 150, 100, 50	3-4-8	3-5-10	4-1-11	5-1-12	5-8-13	6-9-14	7-10-15	8-11-16	9-12-17	11-13-9

Performance Data – 12 x 12 (300 x 300) Face Size

Listed Size	Neck Velocity, fpm	400	500	600	700	800	900	1000	1200	1400	1600
	Velocity Pressure, in w.g.	.010	.016	.022	.031	.040	.050	.062	.090	.122	.160
6	Total Pressure, in w.g.	.038	.059	.085	.116	.152	.192	.237	.341	.464	.606
	Flow Rate, cfm	78	98	118	137	157	176	196	235	274	314
	NC	—	—	—	—	—	18	23	31	38	44
	Throw 150, 100, 50	2-3-6	2-4-7	3-4-8	3-5-9	4-6-10	4-7-10	5-7-11	6-8-12	7-9-13	8-10-14
8	Total Pressure, in w.g.	.068	.106	.153	.208	.271	.343	.424	.610	.831	1.085
	Flow Rate, cfm	140	175	209	244	279	314	349	419	489	558
	NC	—	—	—	—	17	22	27	36	43	49
	Throw 150, 100, 50	3-4-8	3-5-10	4-6-11	5-7-12	6-8-13	6-9-14	7-10-15	8-11-16	10-12-17	11-13-18

Performance Data – 20 x 20 (500 x 500) Face Size

Listed Size	Neck Velocity, fpm	400	500	600	700	800	900	1000	1200	1400	1600
	Velocity Pressure, in w.g.	.010	.016	.022	.031	.040	.050	.062	.090	.122	.160
6	Total Pressure, in w.g.	.014	.022	.031	.043	.056	.071	.087	.126	.171	.223
	Flow Rate, cfm	78	98	118	137	157	176	196	235	274	314
	NC	—	—	—	—	—	18	21	27	32	36
	Throw 150, 100, 50	0-1-3	1-2-4	1-2-4	1-3-5	2-3-6	2-3-6	2-4-6	3-4-7	3-5-7	4-6-8
8	Total Pressure, in w.g.	.022	.035	.050	.069	.090	.114	.140	.202	.275	.359
	Flow Rate, cfm	140	175	209	244	279	314	349	419	489	558
	NC	—	—	—	16	20	24	27	33	38	42
	Throw 150, 100, 50	1-2-5	2-3-6	2-4-6	3-4-7	3-5-7	4-5-8	4-6-8	5-6-9	6-7-10	6-7-11
10	Total Pressure, in w.g.	.032	.051	.073	.099	.130	.164	.203	.292	.397	.519
	Flow Rate, cfm	218	273	327	382	436	491	545	654	763	872
	NC	—	—	—	20	24	28	31	37	42	46
	Throw 150, 100, 50	2-3-6	3-4-7	3-5-8	4-6-9	4-6-9	5-7-10	5-7-10	6-8-11	7-9-12	8-9-13

SCDA - Round Neck

Duct	CFM			NC 30	
	NC 25	NC 30	NC 35	Radius of Diffusion VT = 100	S.P.
6	1856	213	250	4	.05
8	305	349	407	7	.07
10	450	518	600	8	.09
12	609	707	811	9	.09

SCDA/3/24x24/B12
Adjustable Square Cone Diffusers - 24 x 24 Full Face Model T-Bar Mount

Performance Notes:

1. Throw data based on supply air and room air being at isothermal conditions.
2. S.P. shown in inches of water.
3. The above performance data is for horizontal projection. For vertical performance data, see the Price Air Distribution Products catalogue.

DIFFUSER ACCESSORIES:

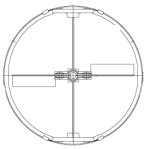

VCR8
Volume Control Damper

6"	10"
8"	12"

EG
Equalizing Grid

6"	10"
8"	12"

520D - Double Deflefection c/w Damper

Size	CFM NC 25	CFM NC 30	CFM NC 35	NC 30 Throw VT = 100	NC 30 S.P.
6 x 4	108	128	180	16	.10
6 x 6	170	200	235	18	.10
8 x 4	170	200	235	18	.10
8 x 6	239	277	324	22	.093
8 x 8	333	390	470	26	.084
10 x 4	205	243	283	20	.098
10 x 6	293	352	410	24	.089
10 x 8	383	447	532	26	.084
10 x 10	480	566	672	31	.075
12 x 4	239	277	324	22	.093
12 x 6	333	390	470	26	.084
12 x 8	480	566	672	31	.075
12 x 10	534	643	760	33	.074
12 x 12	675	797	936	37	.054
14 x 4	266	312	372	23	.090
14 x 6	383	447	532	26	.084
14 x 8	534	643	760	33	.074
16 x 6	430	505	590	30	.084
16 x 8	629	741	890	34	.071
16 x 10	675	797	936	37	.067
16 x 16	1120	1326	1554	47	.058
18 x 4	333	390	470	26	.084
18 x 6	480	566	672	31	.075
18 x 8	675	797	936	37	.067
18 x 12	973	1147	1340	44	.063
20 x 6	534	643	760	33	.074
24 x 4	430	505	590	30	.050
24 x 6	659	776	932	35	.071
24 x 8	855	1012	1180	41	.063
24 x 10	1045	1237	1450	46	.058
24 x 12	1224	1440	1697	49	.054
24 x 18	1782	2085	2500	59	.048
24 x 24	2242	2620	3096	66	.044
30 x 6	776	927	1105	40	.064
30 x 8	1070	1261	1473	46	.063
30 x 10	1278	1504	1772	50	.054
30 x 12	1511	1772	2089	55	.077
36 x 18	2656	3108	3676	72	.044

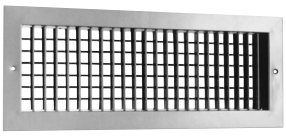

520D/F/S/A/B12
Double Deflection Louvered Supply Grilles w/ Damper

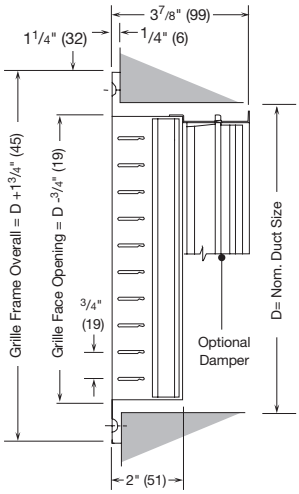

F - Border
S - Blades in front to short dimension
A - Screwhole fastenings

Performance Notes:

1. Throw data based on supply air and room air being at isothermal conditions.
2. S.P. shown in inches of water.

530 - Fixed Louvers No Damper

Size	CFM NC 25	CFM NC 30	CFM NC 35	S.P. at NC 30
6 x 4	66	80	98	0.15
6 x 6	110	130	162	0.15
8 x 4	110	130	162	0.15
8 x 6	156	185	215	0.14
8 x 8	225	265	320	0.13
10 x 4	132	160	195	0.13
10 x 6	200	238	275	0.136
10 x 8	255	310	368	0.13
10 x 10	315	390	480	0.12
12 x 4	156	185	215	0.14
12 x 6	225	265	320	0.13
12 x 8	315	390	480	0.12
12 x 10	370	450	540	0.125
12 x 12	470	570	682	0.11
14 x 4	170	210	255	0.136
14 x 6	255	310	368	0.13
14 x 8	370	450	540	0.125
14 x 10	470	570	615	0.11
14 x 14	590	725	840	0.115
16 x 6	290	342	416	0.125
16 x 8	470	570	615	0.11
16 x 12	590	725	840	0.115
16 x 16	800	960	1120	0.10
18 x 6	315	390	480	0.12
18 x 8	470	570	682	0.11
18 x 12	670	804	950	0.10
18 x 18	980	1210	1456	0.115
20 x 10	590	725	840	0.115
24 x 6	470	570	682	0.11
24 x 8	590	725	840	0.115
24 x 12	860	1040	1260	0.115
24 x 16	1140	1380	1670	0.09
24 x 18	1300	1550	1890	0.09
24 x 24	1023	1232	1500	0.045
30 x 8	670	804	950	0.10
30 x 18	1624	1950	2345	0.08
36 x 18	1930	2290	2788	0.08
36 x 24	2450	2910	3450	0.075
42 x 14	1930	2290	2788	0.081
42 x 24	2650	3300	3900	0.151

Performance Notes:

1. S.P. shown in inches of water.

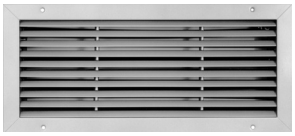

530/F/L/A/B12
Single Deflection Fixed Blade Louvered Return Grilles

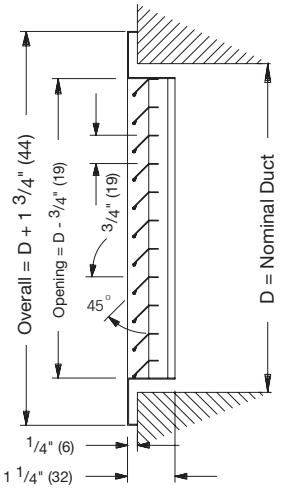

530 / F / L / A / B12 (White)
3/4" (19) Blade Spacing
Fixed Louvers, No Damper

80 Grille

Size	CFM NC 25	CFM NC 30	CFM NC 35	S.P. NC 30
6 x 6	165	190	216	0.182
8 x 4	165	190	216	0.182
8 x 6	200	260	290	0.172
8 x 8	280	360	410	0.162
10 x 4	200	235	257	0.182
10 x 6	280	330	365	0.162
10 x 10	480	530	640	0.150
12 x 4	200	260	290	0.172
12 x 6	280	360	410	0.162
12 x 8	480	530	640	0.150
12 x 10	552	600	710	0.143
12 x 12	690	840	900	0.140
14 x 10	630	750	830	0.143
14 x 14	840	980	1110	0.140
16 x 6	430	490	570	0.195
16 x 8	630	750	830	0.143
16 x 16	1220	1380	1500	0.130
18 x 8	690	840	900	0.140
20 x 12	1220	1340	1500	0.132
20 x 20	2020	2290	2600	0.110
24 x 6	690	840	900	0.145
24 x 12	1310	1490	1700	0.124
24 x 18	1900	2180	2450	0.104
24 x 24	2350	2790	3200	0.104
42 x 12	2488	2850	3350	0.115
42 x 14	2350	2790	3200	0.104

Performance Notes:

1. S.P. shown in inches of water.

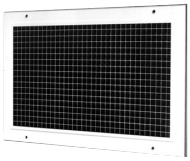

80/F/SW/A/B12
Egg Crate Return Grilles
Surface Mount, F Border

Size	CFM NC 25	CFM NC 30	CFM NC 35	S.P. at NC 30
10 x 10	480	570	660	0.0725
12 x 10	710	805	900	0.075

Performance Notes:

1. S.P. shown in inches of water.

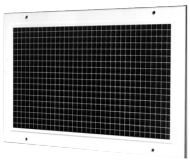

80D/F/SW/A/B12
Egg Crate Return Register
Surface Mount, F Border
w/ Damper

GRILLE ACCESSORIES:

Grille Mounted Opposed Blade Damperr

6 x 6	12 x 6
8 x 6	12 x 8
8 x 8	12 x 12
10 x 6	24 x 12
10 x 10	24 x 24

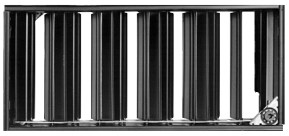

VCS3
Grille Mounted
Opposed Blade Damper

Egg Crate Returns

Size	CFM NC 25	CFM NC 30	CFM NC 35	S.P. at NC 30
6 x 6	165	190	216	0.182
8 x 8	280	360	410	0.162
12 x 12	690	840	900	0.14
20 x 10	940	1180	1340	0.132
20 x 12	1460	1545	1760	0.128
20 x 20	1900	2180	2450	0.104
24 x 6	690	840	900	0.145
24 x 12	1310	1490	1700	0.124
24 x 24	2350	2790	3200	0.104

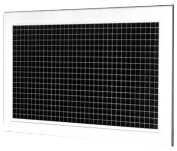

80/ /LI/B12
1/2"Egg Crate Return
T-Bar Lay-In Models
No Damper

Performance Notes:
1. Returns with NF borders have duct connections 3/4" smaller than those for F borders.
2. S.P. shown in inches of water.

Size	CFM NC 25	CFM NC 30	CFM NC 35	S.P. at NC 30
20 x 10	1040	1180	1365	0.60
20 x 20	2224	2600	2925	0.050
24 x 12	1550	1740	1990	.115
24 x 24	2350	2790	3200	.104
48 x 24	4700	5580	6400	.06
60 x 30	6250	7450	8650	.06

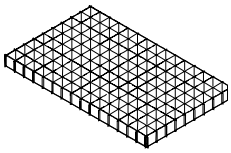

80 Core/B12
Egg Crate Returns (Core Only)
T-Bar Lay-In Models
Aluminum Grid 0º Deflection
1/2" x 1/2" x 1/2" (13)

Performance Notes:
1. S.P. shown in inches of water.

PDN - Square Neck

	CFM			NC 30	
Size	NC 25	NC 30	NC 35	Radius of Diffusion VT = 100	S.P.
15 x 15	625	782	938	15	.04

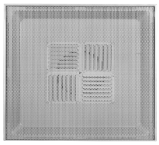

PDN/3/24x24/B12
Perforated Supply Ceiling Diffuser - Square Neck

Performance Notes:

1. Throw data based on suppy air and room air being at isothermal conditions.

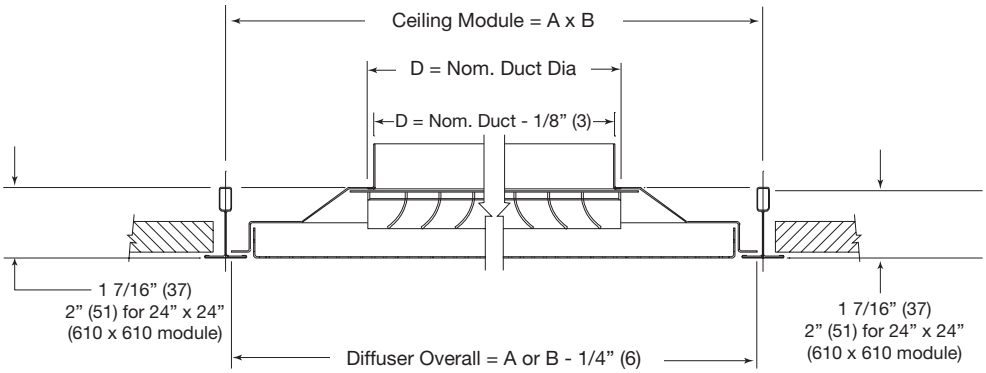

AMDE - Aluminum Modular Diffusers

	CFM			NC 30	
Size	NC 25	NC 30	NC 35	Radius of Diffusion VT = 50	S.P.
15 x 15	758	884	1090	12	.11

SMD/3P/4A/24x24/B12
High Capacity Aluminum Modular Diffuser

Performance Notes:

1. Throw data based on suppy air and room air being at isothermal conditions.
2. S.P. shown in inches of water.

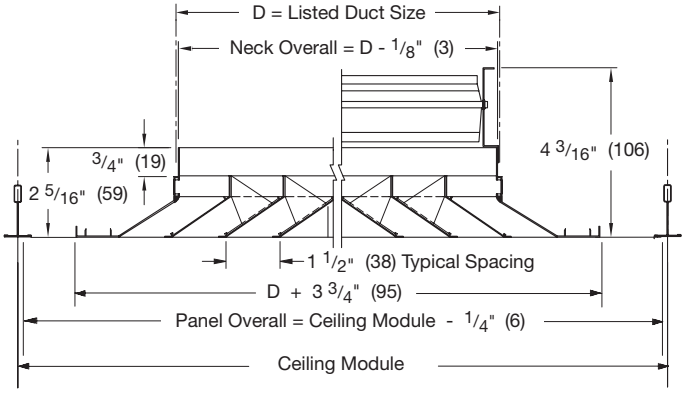

ATG1 DOOR GRILLES:

Size	CFM ΔP = .02"	NC 30 ΔP = .06"
12 x 6	59	78
12 x 8	90	120
12 x 12	135	180
14 x 8	100	140
16 x 8	122	162
16 x 10	135	180
16 x 14	201	268
18 x 12	201	268
18 x 18	312	416
20 x 10	177	236
24 x 12	270	360
24 x 16	368	490
24 x 18	417	556
24 x 24	542	722

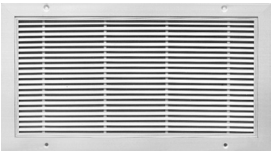

ATG1/BF/B15
Aluminum Transfer/Door Grilles w/ Border on Both Sides

Performance Notes:

1. **DP** = S.P. shown in inches of water.

SDS4 - Architectural Slot Diffuser

CFM			NC 30	
NC 25	NC 30	NC 35	Radius of Diffusion VT = 100	S.P. Horizontal Position
175	200	235	6	.10
240	275	325	7	.09
425	490	580	9	.09
610	705	805	11	.08
680	800	930	12	.10

SDS475/14/24x24/B12
Architectural Slot Diffuser - 4 Way 2 Slot Linear Diffuser

Note: Tile Insert Not Included

Performance Notes:

1. Throw data based on supply air and room air being at isothermal conditions.
2. S.P. shown in inches of water.
3. Plenums availanle with inlet sizes 6", 8", 10" & 12"

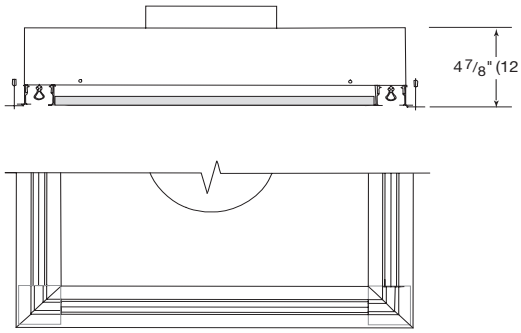

SDS - Linear Slot Diffuser

SDS 75 - 3/4" Air Slots

- Available Sizes: 1, 2, 3 or 4 Slots
- Lengths of 2, 4, 6, or 8 ft.
- With or Without End Borders
- Type 2 Border Frame c/w Concealed Mounting
- Finish: Exposed Face - B12 White Pattern Blades - B17 Black

60"/SDS75/2/2/XX/B12
2 Slot, Surface Mount Concealed Diffuser - 3/4" Slot Width

SDS 75 1-Slot	CFM			NC30	
Length	NC25	NC30	NC35	Throw VT = 50	T.P.
2'0" c/w End Borders	85	100	115	8	.230
4'0" c/w Open Ends	148	174	204	13	.175
6'0" c/w End Borders	216	252	288	16	.175

SDS 75 2-Slot	CFM			NC30	
Length	NC25	NC30	NC35	Throw VT = 50	T.P.
2'0" c/w End Borders	148	174	204	14	.189
4'0" c/w Open Ends	256	296	348	18	.135
6'0" c/w End Borders	366	426	498	22	.125

SDS 75 3-Slot	CFM			NC30	
Length	NC25	NC30	NC35	Throw VT = 50	T.P.
4'0" c/w Open Ends	348	408	480	21	.114
6'0" c/w End Borders	498	426	678	22	.1255

SDS 75 4-Slot	CFM			NC30	
Length	NC25	NC30	NC35	Throw VT = 50	T.P.
4'0" c/w Open Ends	432	512	596	23	.102
6'0" c/w End Borders	612	732	852	28	.094

2 Slot, Surface Mount - Concealed Fastening

No. of Slots	Duct Width D'
1	2 1/4"
2	3 3/4"
3	5 1/4"
4	6 3/4"

Performance Notes:

1. Throw data based on supply air and room air being at isothermal conditions.
2. T.P. is total pressure in inches of water.
3. Capacities are based on pressurized plenum application. For ducted application, see PRICE Air Distribution Products catalogue.

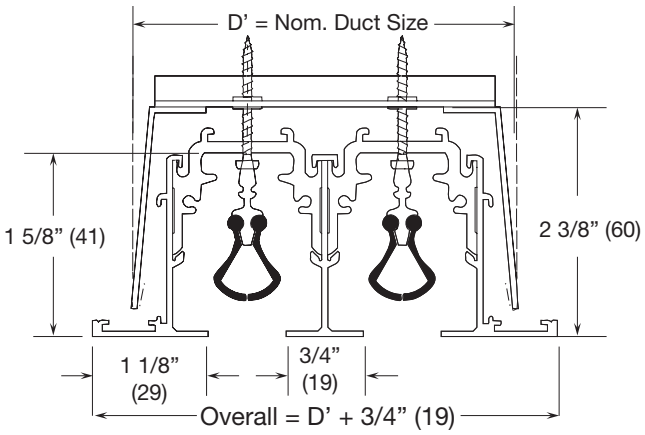

TBD3100 - T-Bar Diffusers

Model TBD3100 1Slot

	CFM	40	50	60	70	80	90	100	110	120
Module = 24" 6" Diameter Inlet	Total Pressure	0.06	0.09	0.12	0.17	0.22	0.28	0.34	0.42	0.50
	Static Pressure	0.05	0.07	0.09	0.13	0.17	0.21	0.26	0.32	0.38
	Throw	3-6-19	4-9-21	6-13-23	8-17-25	10-19-27	12-20-28	16-21-30	18-22-31	19-23-32
	NC (Noise Criteria)	15	22	28	32	36	40	43	46	49
	CFM	50	60	70	80	90	100	110	120	130
Module = 36" 6" Diameter Inlet	Total Pressure	0.03	0.07	0.10	0.12	0.16	0.19	0.24	0.28	0.33
	Static Pressure	0.01	0.04	0.06	0.07	0.09	0.11	0.14	0.16	0.19
	Throw	3-6-18	4-18-20	6-12-21	7-16-23	9-17-24	11-18-26	13-19-27	16-20-28	17-21-29
	NC (Noise Criteria)	—	18	23	27	30	34	37	39	42
	CFM	70	80	90	100	120	140	160	180	200
Module = 48" 6" Diameter Inlet	Total Pressure	0.05	0.06	0.08	0.09	0.14	0.19	0.24	0.31	0.38
	Static Pressure	0.03	0.04	0.05	0.06	0.09	0.12	0.15	0.20	0.25
	Throw	3-6-13	4-8-15	5-9-17	5-10-19	8-12-22	9-14-23	10-15-25	12-17-27	13-19-28
	NC (Noise Criteria)	15	18	22	25	31	35	39	43	46
	CFM	210	240	270	300	330	360	390	420	450
Module = 60" 8" Diameter Inlet	Total Pressure	0.07	0.09	0.11	0.13	0.16	0.19	0.23	0.26	0.30
	Static Pressure	0.05	0.06	0.07	0.08	0.10	0.12	0.15	0.17	0.20
	Throw	6-01-20	8-11-22	9-12-25	9-14-28	10-15-29	11-17-30	12-18-32	13-20-33	14-21-34
	NC (Noise Criteria)	21	25	27	31	34	37	40	42	44

Model TBD3100 2-Slot

	CFM	150	175	200	225	250	275	300	325	350
Module = 48" 8" Diameter Inlet	Total Pressure	0.05	0.07	0.09	0.12	0.15	0.18	0.21	0.25	0.29
	Static Pressure	0.03	0.04	0.06	0.08	0.10	0.11	0.13	0.16	0.18
	Throw	7-10-20	8-12-23	9-13-27	10-15-30	11-16-31	12-18-33	13-20-34	14-21-36	15-23-37
	NC (Noise Criteria)	17	22	26	30	33	36	38	41	43
	CFM	210	240	270	300	330	360	390	420	450
Module = 60" 8" Diameter Inlet	Total Pressure	0.07	0.09	0.11	0.13	0.16	0.19	0.23	0.26	0.30
	Static Pressure	0.05	0.06	0.07	0.08	0.10	0.12	0.15	0.17	0.20
	Throw	6-10-20	8-11-22	9-12-25	9-14-28	10-15-29	11-17-30	12-18-32	13-20-33	14-21-34
	NC (Noise Criteria)	21	25	27	31	34	37	40	42	44

Dimensions (Inches)

Model	Module	H	D	W
TBD3100 1 Slot	48	10	6	1 3/4
	60	12	8	1 3/4
TBD3100 2 Slot	48	12	8	3 1/2
	60	12	8	3 1/2

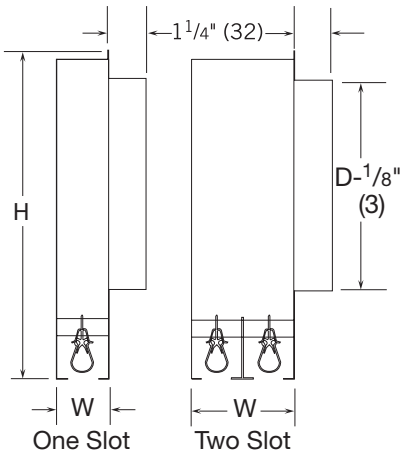

TBD3100 - 2 Slot T-Bar Diffusers

LTA - Light Troffer Diffusers

Cross-Over is Adjustable to Suit Various Light Fixture Widths

Size	W	CFM			NC30	
		NC25	NC30	NC35	Throw VT = 50	S.P.
LTA 14 / LP	8"- 13"	128	150	180	13	.15
LTA 24 / LP	13"- 24"	128	150	180	13	.15

LTA/LP/KD
Light Troffer Diffuser -
Saddle Type Supply Diffuser

Performance Notes:

1. Throw shown in feet, based on horizontal projection and 20°F cooling differential.
2. T.P. is shown in inches of water.

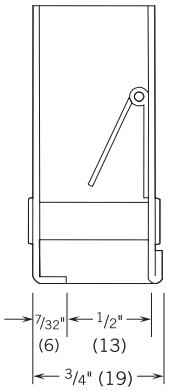

Nose Detail

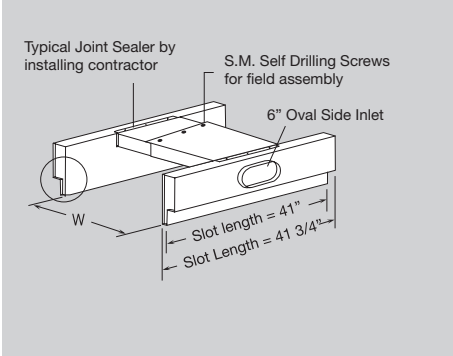

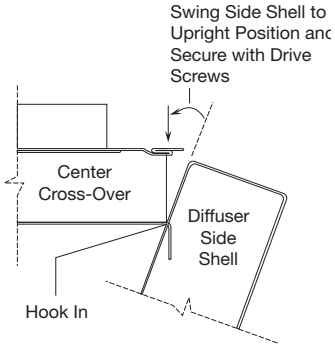

Field Assembly of
Cross-Over to Shell

Saddle Type Supply Diffusers

- Double Side Straddle Type Supply
- Supplied Knocked Down for Field Assembly by Installer
- c/w 6" Oval Side Inlet (3" x 7 9/16")
- Cross-Over is Field Adjustable
- Width 8" - 14" / 14" - 24"

LTA - Light Troffer Diffusers

Size	CFM			NC 30	
	NC 25	NC 30	NC 35	Throw VT = 50	S.P.
10-4	85	97	112	9	.185

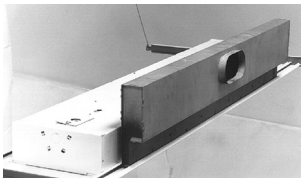

LTA 10-4
Light Troffer Diffuser -
Single Sided Supply Diffuser

Performance Notes:

1. Throw data based on supply air and room air being at isothermal conditions.
2. T.P. is shown in inches of water.

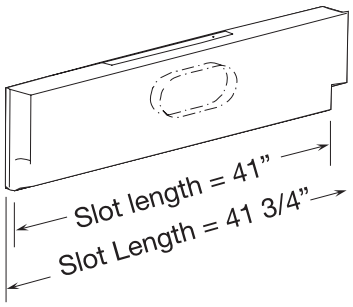

VPD-HC / VPD-C - Varitherm

Performance Data - Maximum Flow Selection Table

Inlet Size	Neck Velocity Velocity Pressure	400 0.010	500 0.016	400 0.022	400 0.031	400 0.040	400 0.050	400 0.062
6"	Static Pressure	0.046	0.071	0.103	0.139	0.182	0.231	0.284
	Total Pressure	0.056	0.087	0.125	0.169	0.222	0.282	0.346
	CFM	79	98	118	137	157	177	196
	NC	—	—	18	22	26	30	33
	Throw, ft	0-1-3	1-2-3	1-2-3	2-2-4	2-2-4	2-3-4	2-3-4
8"	Static Pressure	0.035	0.054	0.077	0.105	0.137	0.174	0.215
	Total Pressure	0.045	0.070	0.099	0.136	0.177	0.224	0.277
	CFM	140	175	209	244	279	314	349
	NC	—	17	22	26	30	34	37
	Throw, ft	2-3-7	3-4-7	3-5-8	4-6-9	5-7-9	5-7-10	6-7-11
10"	Static Pressure	0.031	0.049	0.070	0.096	0.124	0.158	0.194
	Total Pressure	0.041	0.064	0.092	0.126	0.164	0.208	0.257
	CFM	218	273	327	382	436	491	545
	NC	—	19	24	29	33	36	39
	Throw, ft	4-5-9	4-7-11	5-8-12	6-9-12	7-9-13	8-10-14	9-11-15
12"	Static Pressure	0.046	0.071	0.103	0.140	0.183	0.231	0.285
	Total Pressure	0.056	0.087	0.125	0.171	0.222	0.282	0.348
	CFM	314	393	471	550	628	707	785
	NC	19	25	30	35	38	42	45
	Throw, ft	5-8-11	6-9-13	8-10-14	9-11-15	9-11-16	10-12-17	10-13-18
14"	Static Pressure	0.057	0.088	0.127	0.173	0.226	0.286	0.353
	Total Pressure	0.067	0.104	0.149	0.203	0.266	0.336	0.415
	CFM	428	535	641	748	855	962	1069
	NC	23	29	34	38	41	44	47
	Throw, ft	7-9-13	8-10-15	9-11-16	10-12-17	11-13-19	11-14-20	12-15-21

Performance Notes:

1. Performance data is presented for the Prodigy diffuser with the inner cone in the full open (maximum flow) position.
2. Tested in accordance with ASHRAE Standard 70-1991 "Method of Testing for Rating the Performance of Air Outlets and Inlets"
3. Air flow is in cubic feet per minute, CFM.
4. All pressures are in inches of water.
5. Throw values are given in feet to terminal velocities of 150-100-50 fpm.
6. Throw data is based on supply air and room air at isothermal conditions.
2. Tested in accordance with ASHRAE Standard 70-1991 "Method of Testing for Rating the Performance of Air Outlets and Inlets"
3. Air flow is in cubic feet per minute, CFM.
4. Throw values are given in feet to terminal velocities of 150-100-50 fpm.
5. Throw data is based on supply air and room air at isothermal conditions.
6. The NC values, sound pressure level, are based on a room absorption of 10 dB re 10-12 watts and one diffuser.
7. Blanks "—" indicate an NC level below 15.
7. The NC values, sound pressure level, are based on a room absorption of 10 dB re 10-12 watts and one diffuser.
8. Blanks "—" indicate an NC level below 15.

VPD-HC/VPD-C Varitherm Thermally Powered VAV Diffuser

- Steel backpan, faceplate and linkage for strength and durability
- Thermal elements for consistent, repeatable performance
- Hinged faceplate, with powerful magnetic closure ensures simple yet strong cloure, that also allows for quick access to adjustment features.
- Specially engineered damper stack for reduced linkage binding and superior performance over the entire operating range.

Dimensional Data - Imperial (Inches) / Metric (mm)

Ceiling Module		Nominal Duct
Imperial	Metric	
24 x 24 (610 x 610)	600 x 600	6,8,10,12,14 (152,203,254,305,356)

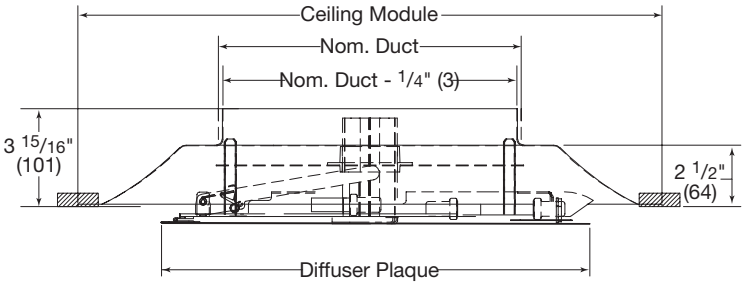

SPV8000 / SDV5000 - Single Duct Terminal Units

SPV8000 Air Volume Ranges c/w CP101 Controller

Recommended Air Volume Ranges for SPV8000 c/w CP101 Controller					Recommended Air Volume Ranges for SPV5000 c/w Electronic or Digital Controls					Stock Calibration CFM
Unit Size	L/s Min.*	L/s Max.	cfm Min.*	cfm Max.	Unit Size	L/s Min.*	L/s Max.	cfm Min.*	cfm Max.	
4	24	106	50	225	**4**	24	106	50	225	0 / 200
5	30	165	63	350	**5**	30	165	63	350	0 / 250
6	31	212	66	450	**6**	31	212	66	450	0 / 300
7	47	307	99	650	**7**	47	307	99	650	0 / 450
8	62	378	132	800	**8**	62	378	132	800	0 / 600
9	79	496	167	1050	**9**	79	496	167	1050	0 / 850
10	104	637	221	1350	**10**	104	637	221	1350	0 / 950
12	143	991	304	2100	**12**	143	991	304	2100	0 / 1700
14	207	1416	439	3000	**14**	207	1416	439	3000	0 / 2200
16	268	1888	568	4000	**16**	268	1888	568	4000	0 / 4000
24 x 16	560	3775	1187	8000	**24 x 16**	500	3775	1187	8000	N/A

***Note: For 4 & 5 box sizes use a size 6 with the appropriate reducer.**

SPV 8000
Single Duct Terminal Unit
c/w pneumatic Controls

SPV8000 / SDV5000
Single Duct NO / DA

- Variable Volume Assemblies
- Pneumatic Control (c / w Pneumatic Actuator)
- Units available "Bare Box" (**No Controller**) (SDV)

CP101 - Pneumatic Controller

- Provides accurate control over a duct velocity range of 0 - 3000 fpm.
- Operates at low system pressures. As effective at 0.02" w.g. as at 6" w.g.
- Completely pressure independent.
- Adjustable minimum and maximum air volume settings easily field adjusted if required.
- Reset span remains constant regardless of maximum and minimum air volume adjustments.
- Provides constant 5 psi reset span as per standard factory calibration.
- Has adjustable start point for reset span to accommodate auxiliaries such as reheat coils.
- Includes option to expand reset span to 10 psi to accommodate most thermostats.
- Adjustable to accommodate either direct acting or reverse acting thermostats. Also settings for either normally open or normally closed damper operation without added control components.
- Standard mounting face down. All adjustments are directly accessible through a ceiling opening.

CP-101 & CSC-3011
Replacement Controller for the SPV Terminal Unit

Also available
CP100 Controllers
for replacement parts

Electronic Controller

Electronic Controller

Custom Controls Mounted in Toronto. Please contact your sales representative for information.

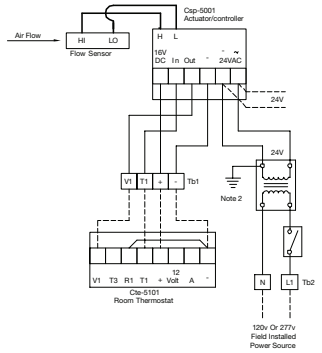

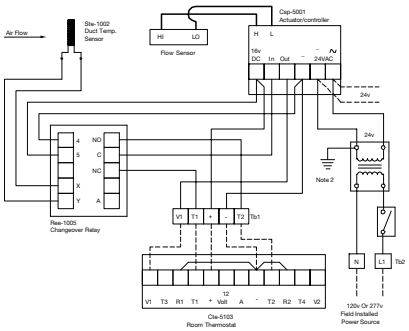

SEV - Single Duct Electronic Controls

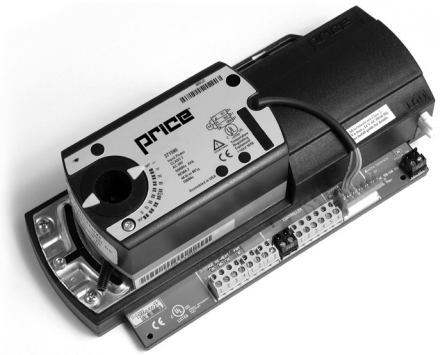

DDC - Electronic Control

ATT-3 - Attenuator

Unit Size	B (Width)	C (Height)
4, 5, 6	12	8
7, 8	12	10
9, 10	14	12 1/2
12	16	15
14	20	17 1/2
16	24	18

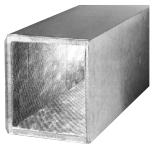

ATT-3
3 Foot Attenuator Section for SDV & SPV Terminal Units

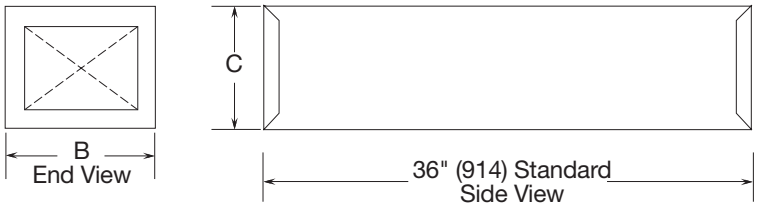

Heating Coils - 2 Row

Dimensional Data — Imperial (inches) / Metric (mm)

Unit Size	B	C
4, 5, 6	12 (305)	8 (203)
7, 8	12 (305)	10 (254)
9, 10	14 (356)	12 1/2 (318)
12	16 (406)	15 (381)

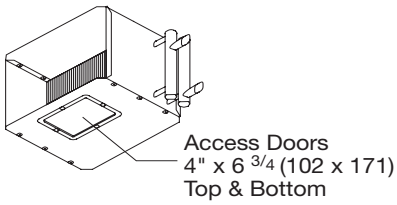

Coil Section c/w CAD
(Coil Access Door)

FDC5000 - Constant Volume Single Duct Terminal Unit

Dimensional Data — Imperial (inches) / Metric (mm)

Unit Size	Maximum Fan cfm	Primary Air Inlet A	Return Air Inlet D	Return Air Inlet E	Outlet Duct Size B	Outlet Duct Size C	W	H	L	F
20	700 (330)	6,8 (152, 203)	9 (229)	12 (305)	12 (305)	10 (254)	24 (610)	14 (356)	28 (711)	4 (101)
30	1200 (566)	8, 10 (203, 254)	13 (330)	15 1/2 (394)	14 (356)	12 1/2 (318)	30 (762)	17 1/2 (445)	30 (762)	3 (76)
40	2000 (943)	10, 12 (254, 305)	13 ((330)	15 1/2 (394)	16 (406)	15 (381)	36 (914)	17 1/2 (445)	32 (813)	4 (101)

FDC8000 Sizes 20 - 60

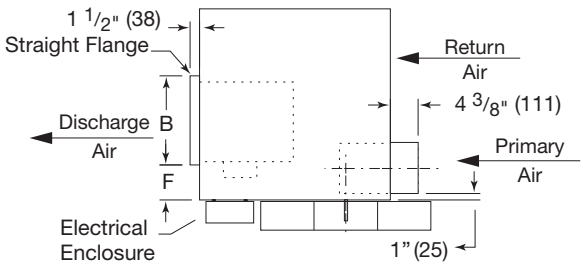

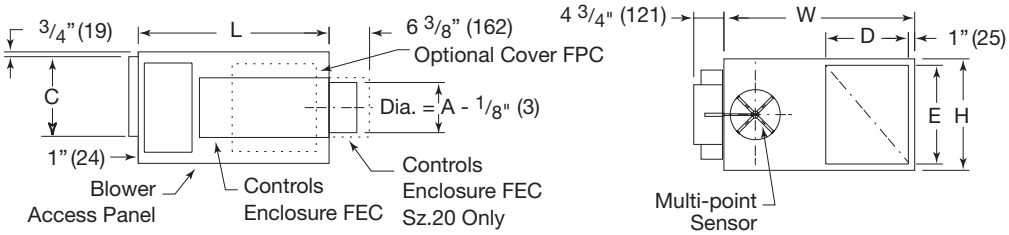

Size	Capacity (CFM) Primary	Capacity (CFM) Secondary
2006	250-400	250-700
2008	400-700	400-700
3008	550-750	550-1200
3010	800-1200	800-1200
4010	800-1250	800-2000
4012	1000-2000	1000-2000

FDC5000
Single Duct Terminal Unit
Constant Volume

Features:

- Recirculating fan section operates continuously.
- Primary air section controls are pressure independent.
- 22 gauge zinc coated steel housing, mechanically sealed, leak resistant construction.
- Internal insulation, 3/4" (19) dual density, coated to prevent air erosion and meets requirements of UL181 and NFPA-90A.
- Bottom access panel of fan section is easily remov able for field service.
- Motor assembly is mounted on vibration isolators. Fan and motor assembly removable as a unit.
- Solid state speed controller for adjusting fan section air flow.
- Units are CSA certified, ETL Listed, ARI Certified.
- Dimensions of control shroud will vary for Series 5000 units depending on the DDC controls supplier.
- A 1 1/2" collar is provided for discharge duct connection.
- Electronic & Pneumatic Controls. Mounted in Toronto.

Call Your Rep.

LGB - By-Pass Boxes

CONTROL PACKAGES AVAILABLE FOR THE LGB BY-PASS BOX

- EC (2500) Electric Cooling
- EHC (2502) Electric Cooling/ Heating Changeover
- EHC1 (2503) Electric Cooling/ Heating Changeover with 1 Stage Reheat
- PNEUMATIC

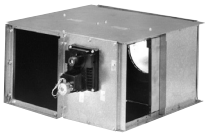

LGB
By-Pass Box

Unit Size	Minimum S.P. Air Flow L/s	cfm	Minimum S.P. Discharge Pa	In W.G.	By-Pass Pa	In W.G.	NCLp Discharge	NCLp Radiated
6	47	100	2	0.01	2	0.01	—	—
	94	200	12	0.05	10	0.04	21	—
	142	300	27	0.11	22	0.09	33	—
	189	400	50	0.22	40	0.16	40	24
8	189	400	17	0.07	32	0.13	25	—
	236	500	25	0.1	50	0.2	31	—
	283	600	37	0.15	72	0.29	36	20
	330	700	50	0.2	97	0.39	40	24
10	236	500	10	0.04	7	0.03	—	—
	330	700	20	0.08	17	0.07	27	—
	425	900	32	0.13	27	0.11	34	—
	519	1100	50	0.2	42	0.17	40	24
12	378	800	12	0.05	24	0.1	21	—
	472	1000	20	0.08	40	0.16	27	—
	614	1300	32	0.13	67	0.27	36	—
	755	1600	50	0.2	100	0.4	40	24
14	519	1100	12	0.05	25	0.1	21	—
	661	1400	22	0.09	40	0.16	28	—
	802	1700	32	0.13	60	0.24	34	—
	991	2100	50	0.2	92	0.37	40	25
16	755	1600	17	0.07	27	0.11	25	—
	944	2000	25	0.1	45	0.18	31	—
	1133	2400	37	0.15	65	0.26	36	23
	1321	2800	50	0.2	87	0.35	40	27

LGB - By-Pass Boxes / Control Sequences

EC (2500) Electric Cooling

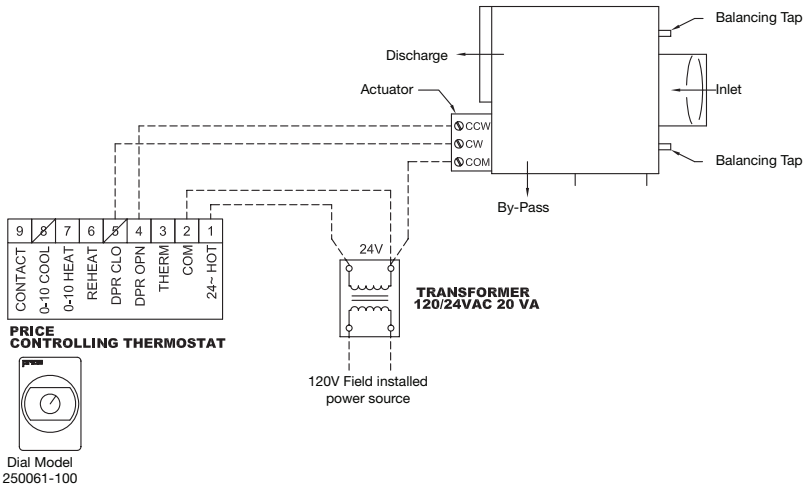

LGB - By-Pass Box Dimensions

Dimensional Data / Imperial (Inches)

Unit Size	Air Flow CFM	Inlet Outlet W	L	H	A	B	C	D
6	400	17	17	10	6	9 1/4	9	10
8	600	17	17	10	8	9 1/4	9	10
10	1200	25	25	14	10	11 5/8	13	12 1/2
12	1500	25	25	14	12	11 5/8	13	12 1/2
14	2000	29	29	16	14	14 1/4	15	15
16	2700	33	33	18	16	15 1/8	17	17 1/2

Dimensional Data / Metric (mm)

Unit Size	Air Flow CFM	Inlet Outlet W	L	H	A	B	C	D
6	189	432	432	254	152	235	229	254
8	283	432	432	254	203	235	229	254
10	566	635	635	356	254	295	330	318
12	708	635	635	356	305	295	330	318
14	944	737	737	406	356	362	381	381
16	1274	838	838	457	406	384	432	445

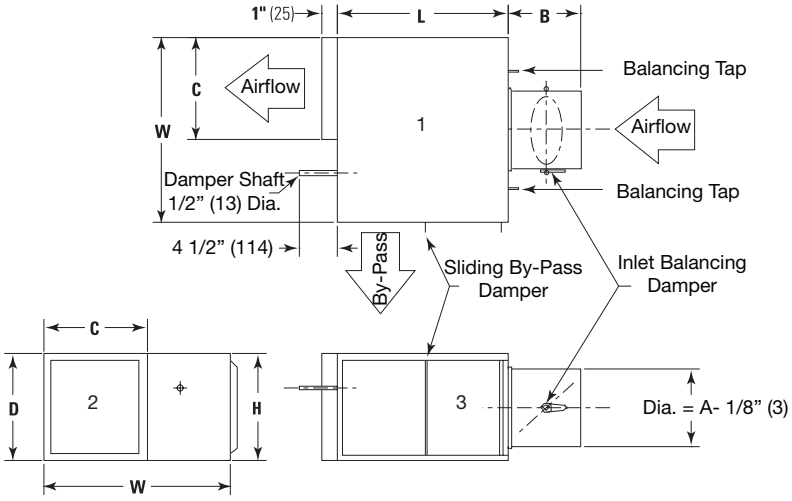

EHC (2502) Electric Cooling/ Heating Changeover

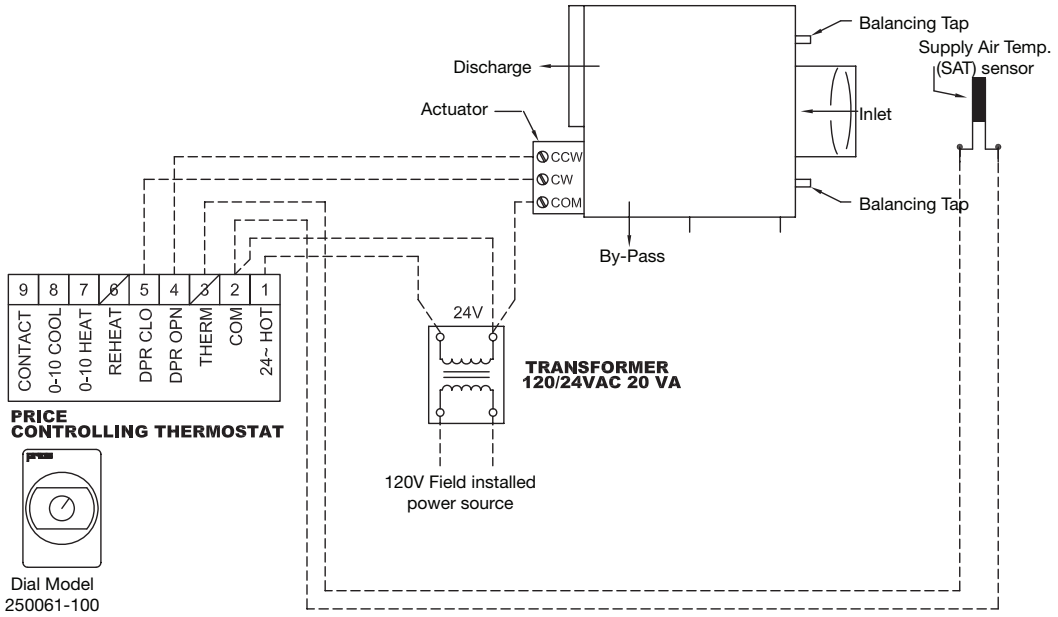

EHC1 (2503) Electric Cooling/ Heating Changeover with 1 Stage Reheat

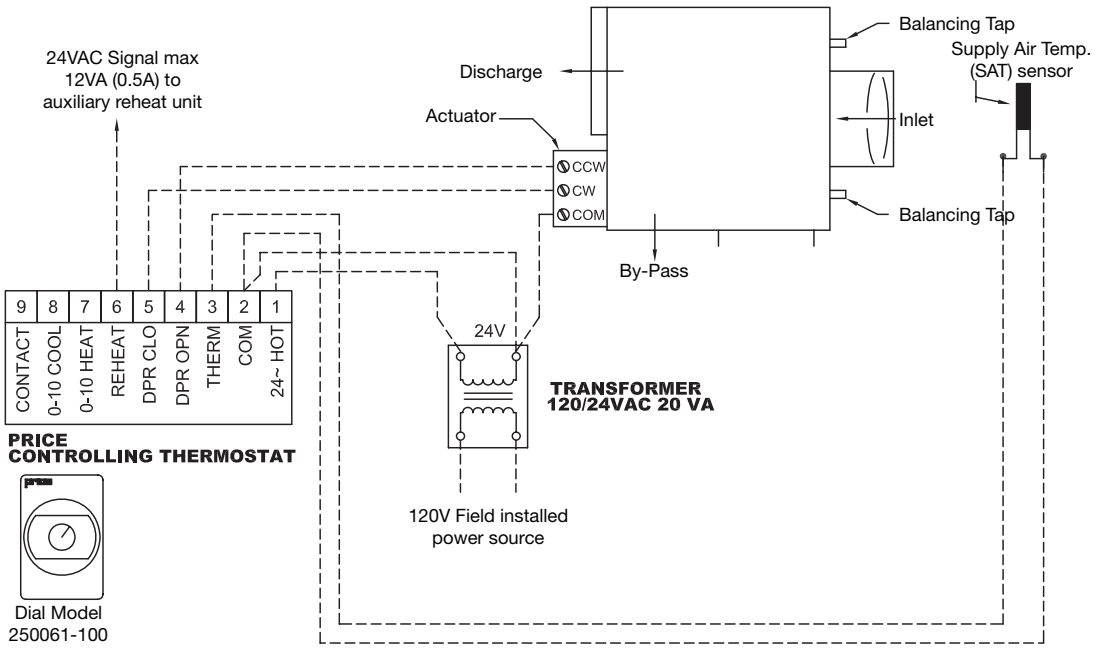

WHISPERCEILING SERIES - Panasonic Ceiling Mounted Ventilation Fans

Performance Data

Model	Power (W)	Static Pressure=0.1	
		CFM	Sones
FV-05VQ3	14	50	<0.3
FV-08VQ3	21	80	0.3
FV-11VQ3	27	110	0.8
FV-20VQ3	42	190	1.3

Performance Notes:

1. Static Pressure is shown in inches of water.

Dimensional Data

Fan Size	A	B	C	D
FV-05VQ3	$9^{1}/_{8}$	$7^{7}/_{8}$	4	$11^{3}/_{16}$
FV-08VQ3	$9^{1}/_{8}$	$7^{7}/_{8}$	4	$11^{3}/_{16}$
FV-11VQ3	$9^{1}/_{8}$	$7^{7}/_{8}$	4	$11^{3}/_{16}$
FV-20VQ3	$12^{3}/_{16}$	$9^{9}/_{32}$	6	15

WhisperCeiling Series

Features:

- Built-in weighted back draft damper
- Low profile, contemporary grille design
- Thermal fuse protection
- Double Hanger Bar for Easy Installation
- UL listed for Tub/Shower

LX

PRESTIGE Series
LX70 LX90 LX110

Very quiet ventilators with painted galvanized steel housing
& white polymeric grille. 4 pole plug in motor with lifetime lubrication.

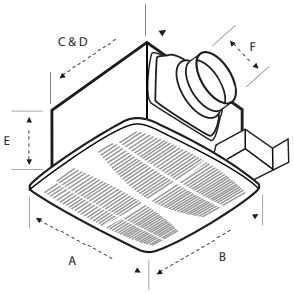

MODEL	GRILLE A x B	HOUSING C x D x E	DUCT F
LX70	11 9/16" x 11 9/16"	9 3/16" x 9 7/16" x 7 5/8"	4"
LX90	11 9/16" x 11 9/16"	9 3/16" x 9 7/16" x 7 5/8"	4"
LX110	11 9/16" x 11 9/16"	9 3/16" x 9 7/16" x 7 5/8"	4"

MODEL	Airflow CFM	Sones at .1'' SP	Power (watt)	Current (amps)	RPM (nominal)	Electrical Rating	Room Capacity
LX70		0.3	17.2	0.159	975	120V/60Hz	80 sq.ft.
LX90		0.7	23.7	0.160	1110	120V/60Hz	100 sq.ft.
LX110		1.0	28.2	0.252	1375	120V/60Hz	120 sq.ft.

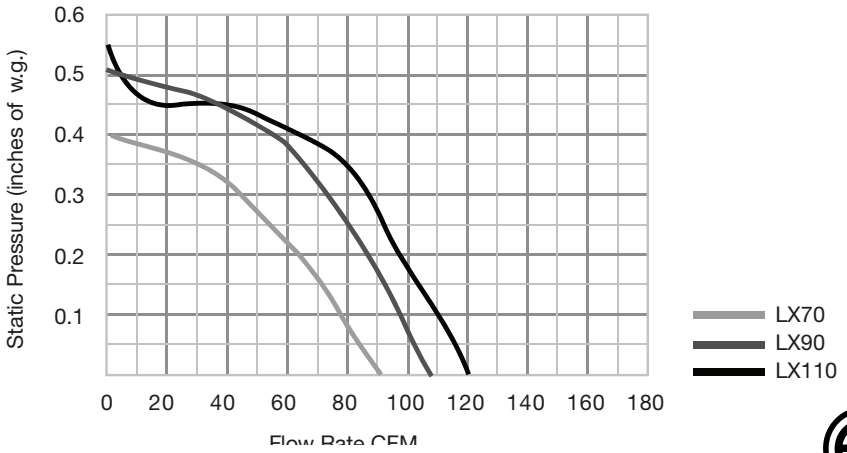

Intertek

LQF

LQF Series
LQF140 LQF160

Quiet ventilating fan; ceiling mount type rated for continuous run. Motor with thermal-cutoff fuse. Rust proof paint, galvanized steel body with 4" diameter duct adapter. Avalable in 140 & 160 CFM. 120V/60Hz Electrical Rating

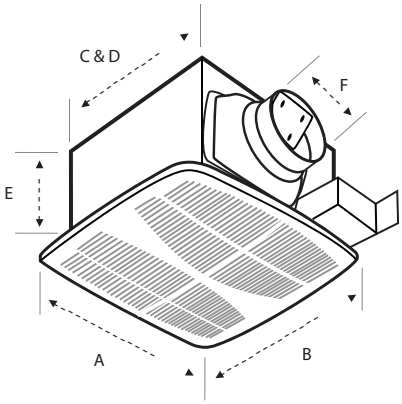

MODEL	GRILLE A X B	HOUSING C X D X E	DUCT F
LQF140	13 1/4" X 13 1/4"	10 1/4" X 10 1/4" X 7 15/16"	4"
LQF160	13 1/4" X 13 1/4"	10 1/4" X 10 1/4" X 7 15/16"	4"

MODEL	CFM	SONES	CURRENT	POWER	RPM	ROOM CAPACITY
LQF140	140	1.5	0.20	41	750	130 sq.ft.
LQF160	160	2.5	0.24	54	960	160 sq.ft.

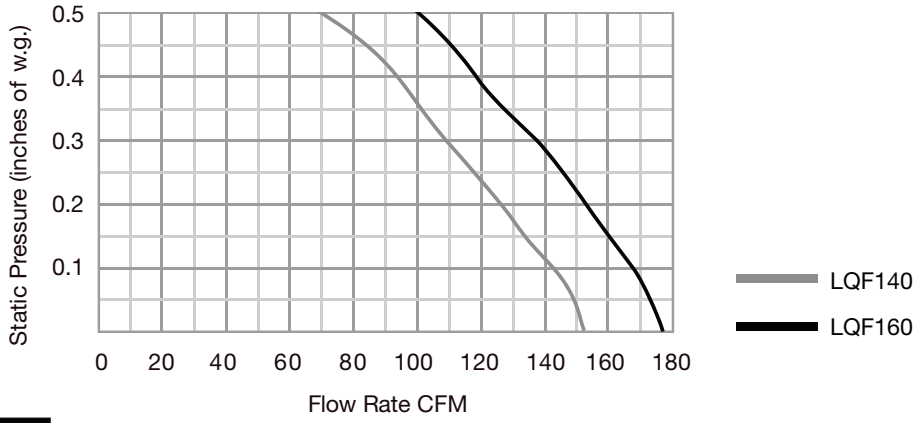

Intertek

EZM

PREMIUM Series
EZM50 EZM70

Premium ventilating fan; ceiling or wall mount. Galvanized steel. Detachable 4" diameter ABS duct adapter. Attractive grille design, using white ABS material. Removable motor 4 pole capacitor equipped with thermal cutoff, rated for continuous run. Available in 50 & 70 CFM. 120V/60Hz Electrical Rating

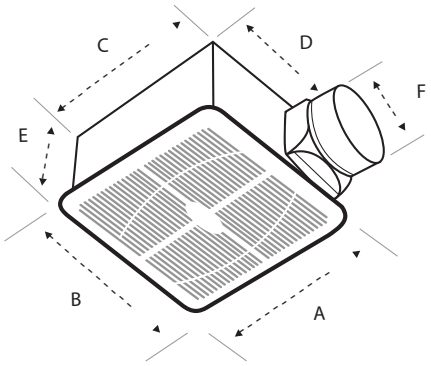

MODEL	GRILLE A X B	HOUSING C X D X E	DUCT F
EZM50	10 1/2" X 10 1/2"	8 1/4" X 8 1/4" X 4 3/4"	4"
EZM70	10 1/2" X 10 1/2"	8 1/4" X 8 1/4" X 4 3/4"	4"

MODEL	CFM	SONES	POWER	CURRENT	RPM	ROOM CAPACITY
EZM50	50	0.6	25.5	0.18	975	50 sq.ft
EZM70	70	1.5	26.1	0.21	1020	70 sq.ft.

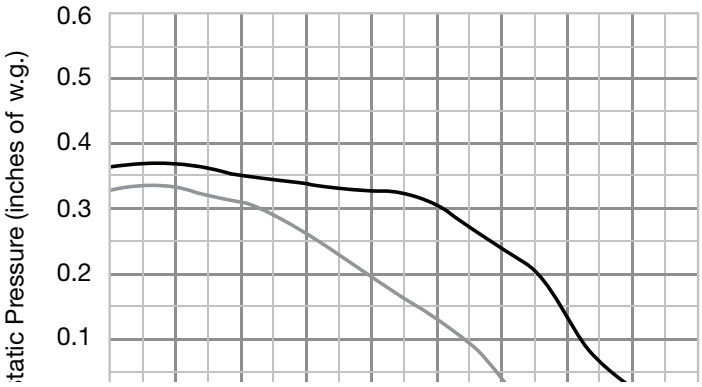

EZM50

Intertek

EZ

DELUXE Series
EZ90 EZ110

Deluxe ventilating fan; ceiling or wall mount galvanized steel.
Detachable 4" diameter duct adapter. Attractive grille design,
using white ABS material. Removable motor is permanently lubricated.
4pole capacitor type equipped with thermal cutoff.
Rated for continuous run. Available in 50 & 70 CFM.
120V/60Hz Electrical Rating

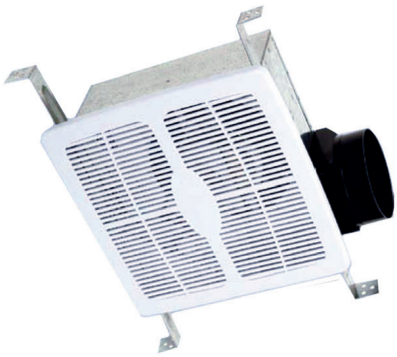

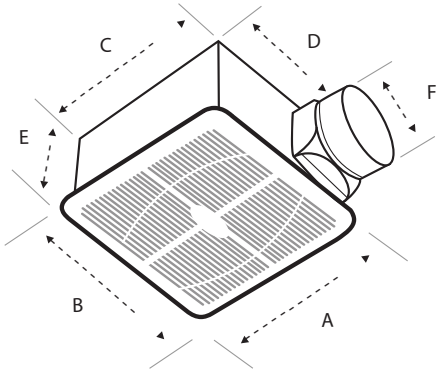

MODEL	GRILLE A X B	HOUSING C X D X E	DUCT F
EZ90	10 1/2" X 10 1/2"	8 1/2" x 8 1/2" 4 3/4"	4"
EZ110	10 1/2" X 10 1/2"	8 1/2" x 8 1/2" 4 3/4"	4"

MODEL	CFM	SONES	CURRENT	POWER	RPM	ROOM CAPACITY
EZ90	90	2.5	0.127	31.1	1050	90 sq.ft.
EZ110	110	3.5	0.159	36.7	1100	110 sq.ft.

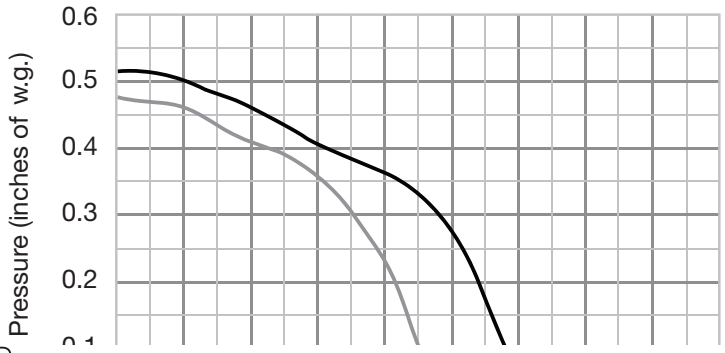

Intertek

XTI

XTI Xlerator Twin Intake Inline Ventilator XTI200

Dual intake fan that can be ceiling or wall mount. Designed for long duct runs. Designed to exhaust two separate intake ports with only one exhaust outlet. 120V/60Hz Electrical Rating.

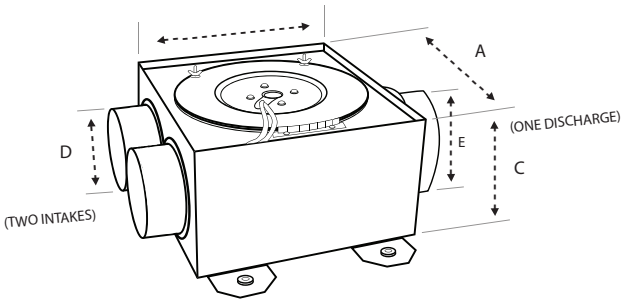

MODEL	HOUSING A X B X C	INTAKE D	DISCHARGE E
XTI200	10 1/2" X 11" X 6"	2 X 4"	5"

MODEL	CFM	CURRENT	POWER	RPM
XTI200	200	0.9	115	2600

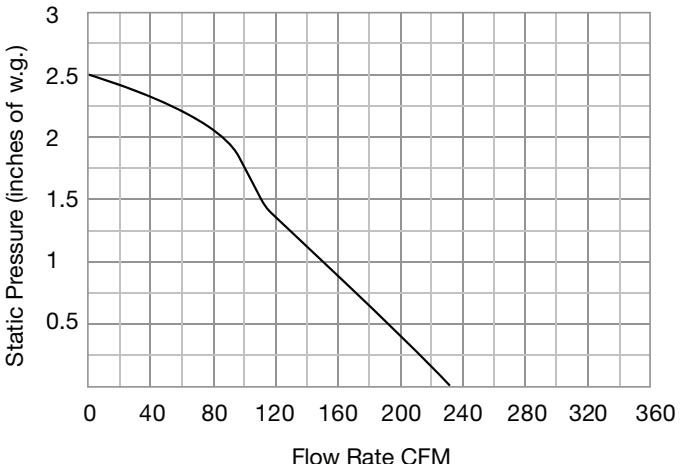

Intertek

XDF

XLERATOR Series Dryer Booster Fan
XDF200 XDF300

European designed external rotor motor / blower technology with superior air performance. 120V/60Hz Electrical Rating. Control systems sold separately (amp sensor or pressure switch).

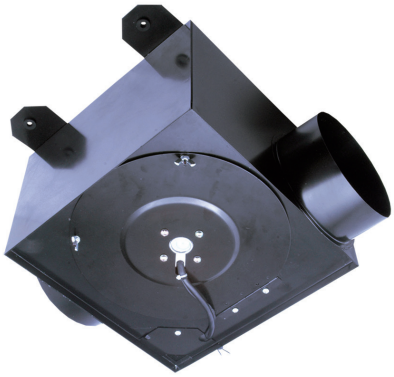

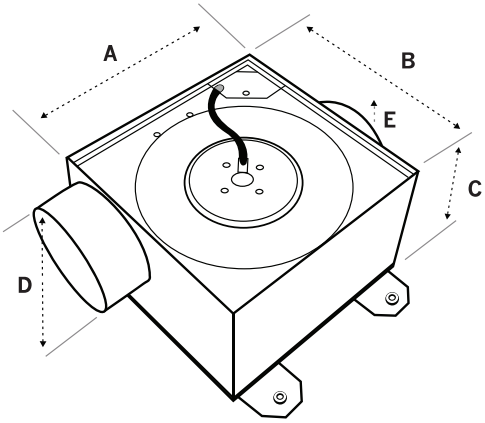

MODEL	HOUSING A X B X C	INTAKE D	DISCHARGE E
XDF200	10 1/2" X 11" X 6"	5"	5"
XDF300	12" X 12" X 8"	6"	6"

MODEL	CFM	CURRENT	POWER	RPM
XDF200	200	0.95	109	2550
XDF300	300	1.4	159	2600

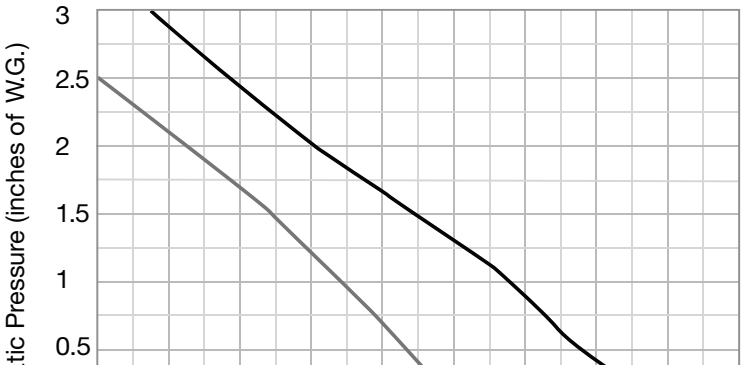

Intertek

FS

PRESSURE SWITCH
FS-751-335

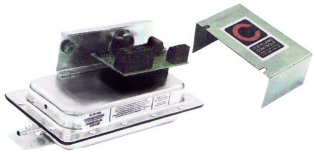

The XDF-PS (FS-751-335) pressure switch monitors the clothes dryer operation.
The XDF series dryer booster fan will activate when the dryer begins to operate. The pressure switch is preset to cycle at ten minute intervals and the dryer booster fan will continue to operate until the dryer turns off.

Operating temperature range: -40° to 180°F (-40.0 and 82.2°C).
Life: 100,000 cycles minimum at 1/2 PSI maximum pressure, each cycle at maximum rated electrical load.
Electrical rating @ 60Hz.- sensing switch

AP

AMP SENSOR
XDF-C (no delay) XDF-CT5 (5 minute delay off)

AC high current switch directly controls AC loads of dryer booster fans in response to the current of a monitored AC circuit.
These models are solid state current switches with N.O. triac outputs to control high current line voltage AC leads.

The device is designed to mount in a standard electrical box.

SP C50 Greenheck Ceiling Exhaust Fans

Performance Data

Model	RPM	Amps	Watts (Input)		CFM / Static Pressure in inches of W.G. 0.000	0.100	0.125	0.250	0.375	0.500	0.625	0.750
SP-C50	1680	0.80	46	CFM	52	49	48	46	43	37	29	—
				Sones	2.9	3.6	3.6	3.9	4.2	4.8	6.3	

Greenheck Ceiling Exhaust Fans

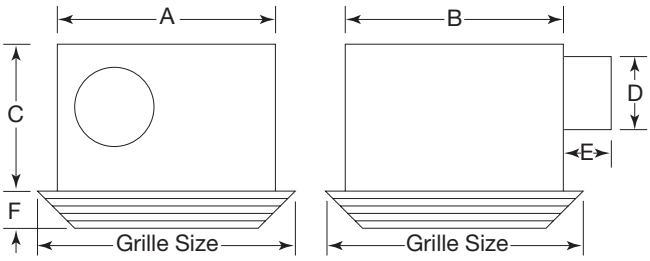

Dimensional Data

Model	A	B	C	D	E	F	Grille Size	Wt.
SP-C50	$7^{1}/_{2}$	$7^{1}/_{4}$	$3^{5}/_{8}$	3	$1^{5}/_{8}$	$^{1}/_{2}$	$9^{1}/_{4}$ x 9	5

For complete dimensional information, see submittal drawings.

SP B90-B200 - Greenheck Ceiling Exhaust Fans

Performance Data

Model	RPM	Amps	Watts (Input)		CFM / Static Pressure in inches of W.G. 0.000	0.100	0.125	0.250	0.375	0.500	0.625	0.750
SP-B90	700	065	50	CFM	102	92	88	75	59	45	30	–
				Sones	1.9	2.6	2.7	3.0	3.6	4.1	4.9	–
SP-B110	950	1.14	80	CFM	133	114	110	98	95	95	92	85
				Sones	2.0	2.1	2.2	2.3	2.7	2.7	3.7	4.4
SP-B150	1050	1.70	129	CFM	166	154	153	152	150	150	148	138
				Sones	3.0	3.2	3.3	3.6	4.3	4.5	4.9	5.3
SP-B200	1100	2.20	173	CFM	196	195	194	193	191	190	181	167
				Sones	4.4	4.6	4.7	5.1	5.7	5.8	6.0	6.3

GREENHECK®

c UL cUL/UL 705 US LISTED

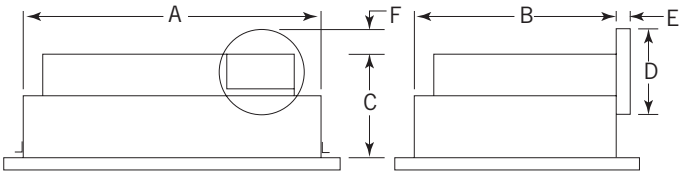

Dimensional Data

Model	A	B	C	D	E	F	Grille Size	Wt.
B90, B110, B150, B200	$13^{7}/_{8}$	$11^{1}/_{2}$	$8^{1}/_{8}$	6	$1^{1}/_{4}$	$1^{1}/_{2}$	$14^{3}/_{4}$ x $12^{3}/_{4}$	10

For complete dimensional information, see submittal drawings.

FAN LEGEND:

SP-A50

Nominal CFM at 0.10 inches static pressure

Level of Construction
- A - Premium; Lowest Sound, Insulated Housing
- B - Deluxe Unit; Low Sound, Low Profile
- C - Standard Unit; Lowest Profile, Less Expensive

Model
- SP - Silent Partner
- CSP - Cabinet Silent Partner

SP A110-A780 - Greenheck Ceiling Exhaust Fans

Performance Data

Model	RPM	Amps	Watts (Input)		CFM / Static Pressure in inches of W.G. 0.000	0.100	0.125	0.250	0.375	0.500	0.625	0.750
SP-A110	950	0.58	49	CFM	119	110	106	88	—	—	—	—
				Sones	1.3	1.2	1.2	1.6	—	—	—	—
SP-A125	1100	0.62	53	CFM	135	123	121	104	—	—	—	—
				Sones	1.4	1.7	1.8	1.9	—	—	—	—
SP-A190	1400	1.30	113	CFM	216	197	192	167	133	—	—	—
				Sones	3.2	2.8	2.9	3.1	3.4	—	—	—
SP-A250	1000	0.77	83	CFM	272	251	246	227	210	185	157	119
				Sones	2.9	3.0	3.0	3.4	4.4	4.6	4.9	5.2
SP-A290	1050	0.72	81	CFM	315	293	287	257	231	207	175	124
				Sones	3.2	3.3	3.3	3.6	3.9	4.1	4.5	5.5
SP-A390	1350	1.34	135	CFM	410	395	391	368	345	325	307	279
				Sones	5.4	5.4	5.4	5.7	6.0	6.3	6.4	6.7
SP-A410	1000	1.74	121	CFM	443	413	405	351	305	109	—	—
				Sones	4.1	3.8	3.7	3.7	4.3	3.7	—	—
SP-A510	1070	3.30	224	CFM	557	512	501	439	392	325	—	—
				Sones	6.0	5.7	5.6	5.5	5.4	4.7	—	—
SP-A710	1080	4.40	285	CFM	752	714	701	653	588	485	320	—
				Sones	7.4	7.2	7.2	7.0	6.8	6.7	6.5	—

GREENHECK®

Greenheck Ceiling Exhaust Fans

cUL/UL 705 US LISTED

Dimensional Data

Model	A	B	C	D	E	Grille Size	Wt.
A110, A125, A190, A250, A290, A390	$13^{1}/_{4}$	$10^{5}/_{8}$	$10^{1}/_{2}$	8	6	$14^{3}/_{4}$ x $12^{3}/_{4}$	15
	14	$11^{7}/_{8}$	$11^{1}/_{2}$	8	8	$14^{3}/_{4}$ x $12^{3}/_{4}$	21
A410, A510	18	$14^{3}/_{8}$	$14^{1}/_{2}$	8	8	$19^{3}/_{8}$ x $16^{3}/_{8}$	31
A710	18	$14^{3}/_{8}$	$14^{1}/_{2}$	10	8	$19^{3}/_{8}$ x $16^{3}/_{8}$	34

For complete dimensional information, see submittal drawings.

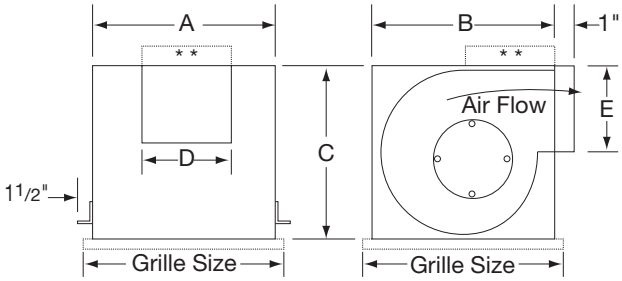

****Optional Discharge Position**

SP A900 - A1550 - Greenheck Ceiling Exhaust Fans

cUL/UL 705 US LISTED

GREENHECK

Greenheck Ceiling Exhaust Fans

Performance Data - For performance notes, see page 19

Model	RPM	Amps	Watts (Input)		CFM / Static Pressure in inches of W.G. 0.000	0.100	0.125	0.250	0.375	0.500	0.625	0.750
SP-A900	950	4.00	285	CFM	955	907	896	841	773	701	—	—
				Sones	5.2	5.7	5.8	6.1	6.2	6.2	—	—
SP-A1050	1095	6.30	420	CFM	1125	1058	1043	964	885	796	662	—
				Sones	7.2	7.0	6.9	6.8	6.6	6.5	6.4	—
SP-A1410	1450	7.40	786	CFM	1455	1414	1404	1353	1307	1262	1218	1174
				Sones	11.6	11.6	11.7	11.6	11.5	11.6	11.6	11.6
SP-A1550	1610	8.60	818	CFM	1607	1568	1558	1506	1449	1407	1369	1323
				Sones	12.4	12.1	12.0	12.0	11.9	12.8	14.1	15.9

Dimensional Data

Model	A	B	C	D	E	Grille Size	Wt.
A900, A1050, A1410, A1550	23 3/4	14 3/8	14 1/2	18 3/4	8	25 x 16 3/8	56

For complete dimensional information, see submittal drawings.

**Optional Discharge Position

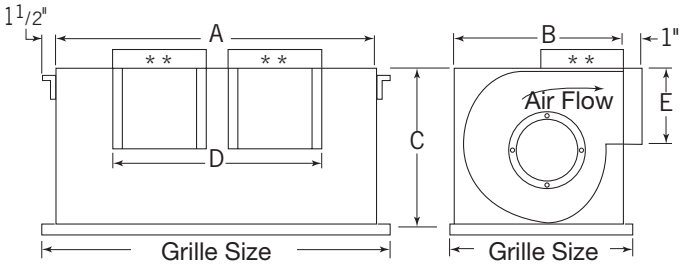

****Optional Discharge Position**

CSP A110 - A780 - Greenheck Ceiling Exhaust Fans

cUL/UL 705 US LISTED

GREENHECK

Performance Data

Model	RPM	Amps	Watts (Input)		CFM / Static Pressure in inches of W.G. 0.000	0.100	0.125	0.250	0.375	0.500	0.625	0.750
CSP-A110	950	0.62	51	CFM	125	110	102	77	—	—	—	—
				Sones	1.1	1.1	1.3	1.3	—	—	—	—
CSP-A190	1400	1.10	100	CFM	215	202	198	180	159	—	—	—
				Sones	2.3	2.0	2.2	2.7	2.9	—	—	—
CSP-A200	900	0.43	48	CFM	254	230	225	203	177	145	109	70
				Sones	0.8	0.7	0.8	1.3	1.5	1.9	2.2	2.1
CSP-A250	1000	0.79	83	CFM	266	246	241	221	205	187	165	132
				Sones	1.3	1.5	1.5	2.3	3.3	3.4	3.2	3.0
CSP-A290	1050	0.71	80	CFM	318	299	292	265	248	229	201	144
				Sones	1.6	1.7	1.8	2.6	3.3	4.0	3.7	3.4
CSP-A390	1350	1.33	144	CFM	412	400	397	382	363	339	324	309
				Sones	2.8	2.7	2.8	3.2	3.7	4.7	5.5	6.5
CSP-A410	1000	1.87	139	CFM	447	411	403	364	316	217	—	—
				Sones	2.2	2.1	2.2	2.5	2.7	2.7	—	—
CSP-A510	1070	3.11	217	CFM	545	514	506	464	405	324	—	—
				Sones	3.1	2.9	2.8	2.8	2.7	3.1	—	—
CSP-A710	1080	4.40	325	CFM	737	698	688	635	566	474	334	—
				Sones	3.2	3.3	3.2	3.3	2.7	2.5	2.7	—
CSP-A780	1600	3.77	405	CFM	813	783	776	741	707	671	637	603

Dimensional Data

Model	A	B	C	D	E	Grille Size	Wt.
A190	13 1/4	10 5/8	10 1/2	8	6	14 3/4 x 12 3/4	16
A250, A290, A390	14	11 7/8	11 1/4	8	8	14 3/4 x 12 3/4	23
A410, A510	18	14 3/8	14 1/2	8	8	19 3/8 x 16 3/8	36
A710, A780	18	14 3/8	14 1/2	10	8	19 3/8 x 16 3/8	36

For complete dimensional information, see submittal drawings.

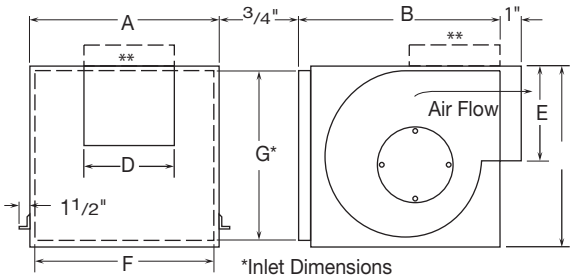

*Inlet Dimensions
**Optional Discharge Position

CSP A900-A1750 - Greenheck Cabinet Exhaust Fans

Performance Data

Model	RPM	Amps	Watts (Input)		CFM / Static Pressure in inches of W.G.							
					0.000	0.100	0.125	0.250	0.375	0.500	0.625	0.750
CSP-A900	950	4.87	328	CFM	908	852	840	782	714	631	—	—
				Sones	3.7	3.8	3.8	4.0	4.0	4.1	—	—
CSP-A1050	1095	6.65	455	CFM	1182	110	1093	1013	922	832	743	—
				Sones	6.3	6.1	5.9	5.8	6.0	6.0	5.5	—
CSP-A1410	1450	7.80	822	CFM	1584	1543	1533	1483	1439	1395	1345	1293
				Sones	6.3	6.2	6.2	6.3	6.5	6.8	7.2	7.6
CSP-A1550	1610	8.32	830	CFM	1672	1617	1604	1542	1484	1427	1367	1306
				Sones	8.6	8.2	8.5	8.4	8.5	8.5	8.5	8.5

Performance Notes:

Performance shown is for Model CSP inline installation type B: free inlet, ducted outlet. Performance ratings include the effects of an inlet duct and backdraft damper in the airstream. Speed (RPM) shown is nominal. Performance is based on actual speed of test.

The sound ratings shown are loudness values in fan sones at 5 ft. (1.5m) in a hemispherical free field calculated per AMCA Standard 301. Values are for installation type B: free inlet sone levels. The AMCA Certified Ratings Sound Seal applies to sone ratings only.

Dimensional Data

Model	A	B	C	D	E	F	G	Wt.
A900,A1050 A1410, A1550	23 3/4	14 3/8	14 1/2	18 3/4	8	22 5/8	13 1/4	5 9
A1750	35	14 3/4	14 3/4	28	6	32 3/4	13	68

For complete dimensional information, see submittal drawings.

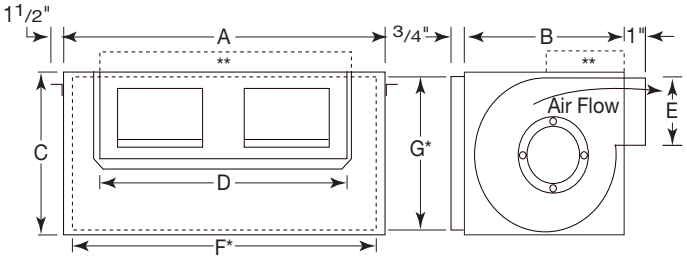

*Inlet Dimensions **Optional Discharge Position

WC - Greenheck Round Wall Cap

Dimensional Data

Model	A	B	C	D	E
WC4	4	5	6	6.5	2.75
WC6	6	5	8	8	4.125
WC8	8	3.5	11	11	5.125

For complete dimensional information, see submittal drawings.

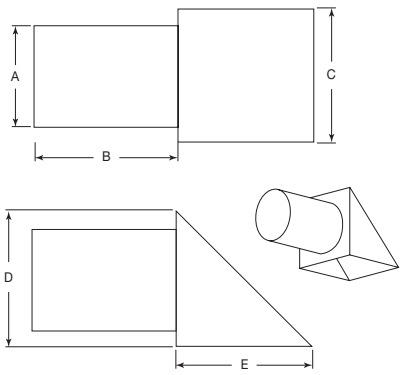

SP & CSP - ACCESSORIES

Model WL
Wall Louvered Discharge

- Anodized aluminum grille
- Build in damper
- Not recommended for exterior applications exposed to severe weather conditions. An external wall louver is recommended for such applications.

Model	For use with sizes	A	B	C	D	E
WL-10x3	5-226	12	5 1/4	10	7 3/4	3 1/2
WL-18X6	228-265	19 3/4	8	18	9	6

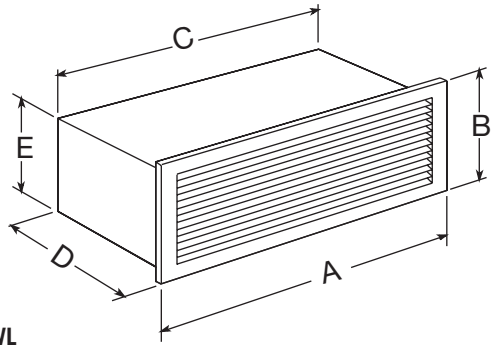

Model WL

Model RFC-7

- Weathertight aluminum construction
- Integral birdscreen
- Built in flashing flange

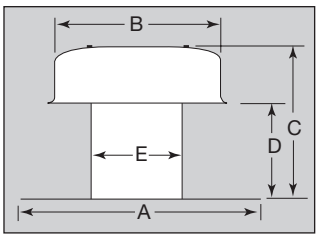

Model	For use with sizes	A	B	C	D	Throat Dia.
RFC-7	5-228	18	12	10	6 3/8	7

Model RDC Round Duct Connector

- Replaces the standard square discharge duct-connector and damper
- Uses existing mounting holes
- Galvanized steel construction
- RDC does *not include* a damper

Model	For use with sizes	Dia.
RDC-6	210-218	6
RDC-8	224-252	8

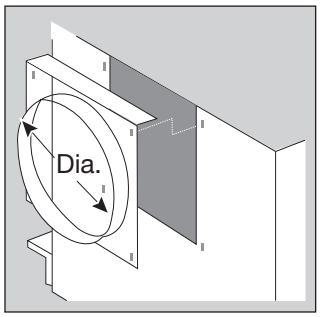

Model WC - 10 x 3
Hooded Wall Cap

- Steel construction with black enamel finish
- For outside wall applications
- Built in birdscreen and damper

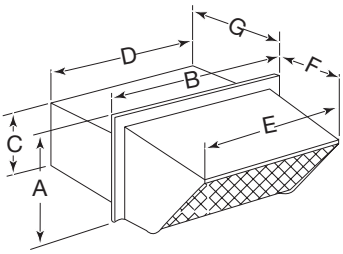

Model	For use with sizes	A	B	C	D	E	F	G
WC-10x3	5-226	5 1/2	12 3/4	3 1/2	10 1/4	11 1/8	4 1/4	5

SSC Speed Control

5.0W SSC
For application up to 5 amps (required 2 x 4 handy box by others)

10W SSC
For applications up to 10 amps (requires 4 x 4 handy box by others)

- **Time Delay Switch - Model GTD**
- **MS16**
- **Reverse Acting T-Stat**
- **7 Day Programmable Timer**

Hanging Vibration Isolators (CK)

Vibration isolator kits are available for suspended installations. Kits include all hardware necessary to mount one unit, with the exception of 1/4" threaded rod supplied by others. Fan mounting brackets include pre-punched holes for ease of installation.

	Unit Sizes					
	B110-200	A110-190	A250-390	A410-780	A900-1500	A1750
A	4 1/2	5 1/2	6 3/4	9 1/4	9 1/4	9 1/4
B	11 5/8	14 5/8	15 1/2	19 5/8	25 3/8	36 3/4

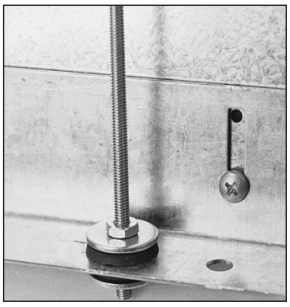

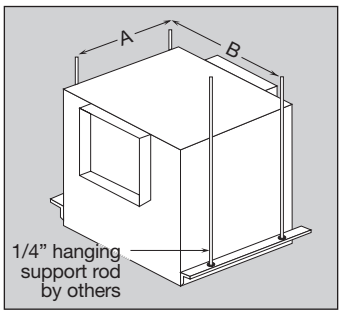

MODEL G - Direct Drive Centrifugal Roof Exhausters

cUL/UL 705 US LISTED

GREENHECK

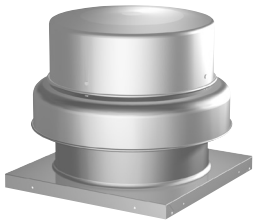

Greenheck Roof Exhausters

Dimensions (inches)

Model	A	B	C*	WD-100 Damper	Roof Opening
G-065, 070, 075	17	$19^{3}/_{8}$	$12^{1}/_{8}$	8	$10^{1}/_{2}$
G-080, 085, 090, 095	17	$21^{3}/_{4}$	$14^{5}/_{8}$	10	$12^{1}/_{2}$

*May vary depending on motor size

- **Curbs Available - GPI 17**

amca CERTIFIED RATINGS SOUND AIR PERFORMANCE AIR MOVEMENT AND CONTROL ASSOCIATION, INC.

Greenheck Fan Corporation certifies that the G models shown herein are licensed to bear the AMCA Seal. The ratings shown are based on tests made in accordance with AMCA Standard 210 and AMCA Standard 300 and comply with the requirements of the AMCA Certified Ratings program.
The sound ratings shown were obtained in accordance with AMCA Standard 300 fig. 2. Loudness values in sones at a distance of 5 feet were calculated in accordance with AMCA Standard 301. The AMCA Certified Ratings Sound Seal applies to sone ratings only.

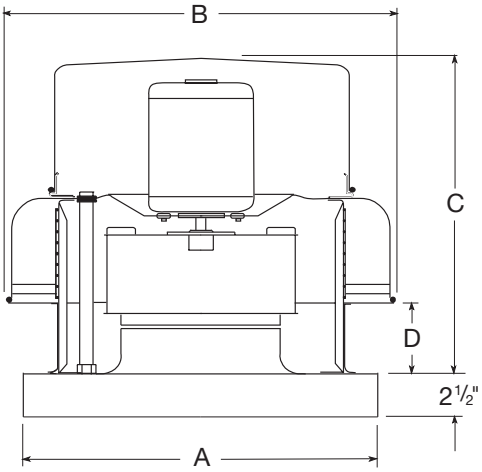

Model G

Model G direct drive exhausters are designed for roof mounted applications exhausting relatively clean and cool air. They feature a spun aluminum housing, a non overloading backward inclined wheel, and positive motor cooling. Model G fans are licensed to bear the AMCA Certified Ratings Seals for air and sound performance and are U.L. Listed and CSA certified.

Accessories

- Roof curbs. See page 35.
- Backdraft damper. Model WD-100, gravity or motorized. See page 44.
- Speed controls.

MODEL G - Direct Drive Centrifugal Roof Exhausters

cUL/UL 705 US LISTED

GREENHECK

Performance Data

	Model	HP	RPM	TS	Static Pressure / Capacity 0.000 Sone	0.000 BHP	0.100 Sone	0.100 BHP	0.125 Sone	0.125 BHP	0.250 Sone	0.250 BHP	0.375 Sone	0.375 BHP	0.500 Sone	0.500 BHP	0.625 Sone	0.625 BHP
G-065	G-065-E	1/100	1050	2234	187		139		110									
					2.2	.006	2.0	.007	2.0	.007								
	G-065-G	1/60	1300	2765	231		189		178		91							
					3.2	.011	3.0	.012	2.9	.013	2.7	.012						
	G-065-D	1/30	1550	3297	276		241		232		176		96					
					4.8	.019	4.4	.019	4.3	.020	4.0	.022	4.0	.020				
G-070	G-070-E	1/100	1050	2234	254		196		179									
					2.5	.007	1.7	.008	1.5	.008								
	G-070-G	1/60	1300	2765	314		268		257		171							
					4.1	.013	3.4	.015	3.2	.015	2.7	.015						
	G-070-D	1/30	1550	3297	374		337		327		274		190					
					5.6	.022	5.3	.024	5.2	.024	4.7	.026	4.2	.025				
G-075	G-075-E	1/80	1050	2234	396		222		200									
					3.3	.010	2.8	.011	2.7	.011								
	G-075-G	1/50	1300	2765	367		309		294		195							
					4.4	.019	3.8	.020	3.7	.021	3.6	.020						
	G-075-D	1/25	1550	3297	438		389		377		310		214					
					6.1	.033	5.5	.034	5.4	.035	5.3	.035	4.5	.033				
G-080	G-080-E	1/40	1050	2990	335		268		249		134							
					3.8	.012	3.6	.015	3.6	.016	3.5	.017						
	G-080-G	1/30	1300	3701	415		361		348		272		175					
					5.4	.022	5.4	.026	5.4	.027	5.4	.032	5.4	.033				
	G-080-D	1/20	1550	4413	495		450		439		379		314		238			
					7.3	.038	7.4	.042	7.4	.044	7.4	.050	7.4	.055	7.4	.057		
G-085	G-085-E	1/40	1050	2990	399		326		307		179							
					3.6	.012	3.7	.016	3.7	.017	3.8	.019						
	G-085-G	1/30	1300	3701	494		436		421		340		233					
					5.4	.023	5.3	.028	5.3	.029	5.2	.035	4.9	.036				
	G-085-D	1/20	1550	4413	588		541		529		464		393		308		169	
					7.5	.039	7.4	.044	7.4	.046	7.4	.053	7.5	.060	7.6	.062	7.7	.056
G-090	G-090-E	1/40	1050	2990	520		441		420		292							
					3.8	.014	3.7	.019	3.7	.020	3.6	.024						
	G-090-G	1/25	1300	3701	644		580		564		478		373					
					5.4	.027	5.4	.033	5.4	.034	5.5	.041	5.5	.045				
	G-090-D	1/15	1550	4413	768		714		700		633		558		472		338	
					7.5	.046	7.4	.053	7.4	.055	7.4	.063	7.4	.070	7.4	.076	7.4	.074
G-095	G-095-E	1/30	1050	2990	717		605		569		389							
					4.9	.029	4.6	.034	4.6	.035	4.5	.037						
	G-095-G	1/12	1300	3701	888		801		780		640		493		184			
					7.4	.058	6.9	.061	6.8	.063	6.5	.069	6.4	.071	6.4	.049		
	G-095-D	1/8	1550	4413	1059		986		969		863		745		623		474	
					9.6	.095	9.4	.101	9.4	.103	9.1	.111	8.2	.117	8.0	.120	8.0	.114

Performance Notes:

1. Performance shown is for Model G without ducts.

MODEL GB - Belt Drive Centrifugal Roof Exhausters

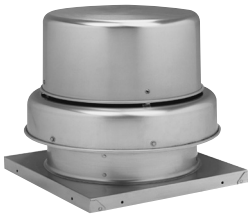

Greenheck Roof Exhausters

Dimensions (inches)

Model	A	B	C*	WD-100 Damper	Roof Opening
GB-071, 081, 091	19	24 3/8	23 3/4	12	14 1/2
GB-101, 121	19	24 3/8	23 3/4	12	14 1/2
†GB-131	19	28 3/8	23 3/4	12	18 1/2
GB-141	22	28 3/8	23 3/4	16	18 1/2
GB-161	22	28 3/8	23 3/4	16	18 1/2
†GB-180	30	35 1/2	28	18	20 1/2
†GB-200	30	35 1/2	28	18	20 1/2

*May vary depending on motor size
†Units stocked less motors, drives and disconnects.
Contact your Price Rep for available Motor / Drive options.

amca CERTIFIED RATINGS SOUND AIR PERFORMANCE AIR MOVEMENT AND CONTROL ASSOCIATION, INC.

Greenheck Fan Corporation certifies that the GB models shown herein are licensed to bear the AMCA Seal. The ratings shown are based on tests made in accordance with AMCA Standard 210 and AMCA Standard 300 and comply with the requirements of the AMCA Certified Ratings program. The sound ratings shown were obtained in accordance with AMCA Standard 300 fig. 2. Loudness values in sones at a distance of 5 feet were calculated in accordance with AMCA Standard 301. The AMCA Certified Ratings Sound Seal applies to sone ratings only.

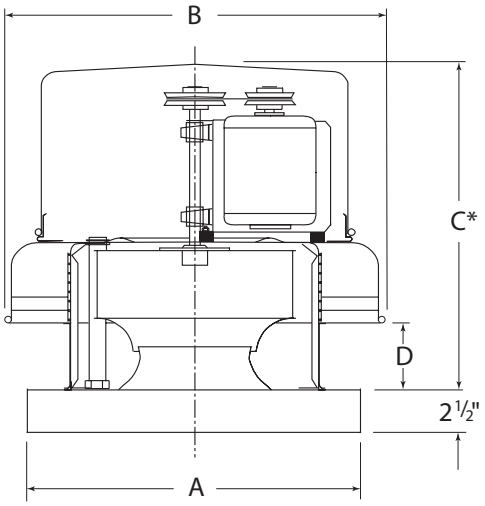

Model GB

Model GB belt drive exhausters are designed for roof mounted applications exhausting relatively clean air. They feature a spun aluminum housing and non-overloading backward inclined wheel. Motors are located out of the airstream with positive cooling by ambient air. Model GB fans are licensed to bear the AMCA Certified Ratings Seals for air and sound performance and are U.L. Listed and CSA certified. Units complete with birdscreen, Disconnect switch.

Accessories

- Roof curbs. See page 35.
- Backdraft damper. Model WD-100, gravity or motorized. See page 44.

Dampers Available

- 10 x 10 Damper
- 12 x 12 Damper
- 16 x 16 Damper
- 18 x 18 Damper
- 24 x 24 Damper

GPI's Available

- 17
- 19
- 22
- 30
- 34

MODEL GB - Belt Drive Centrifugal Roof Exhausters

cUL/UL 705 US LISTED

GREENHECK

Performance Data

Model	HP	Range	RPM	TS	Sones	Max BHP	Performance in Inches WG							
							0	0.125	0.25	0.375	0.5	0.75	1	1.25
GB-081-4	1/4	R1	630	1845	2.4	0.009	316	207						
		R1, R2	939	2750	4.7	0.031	470	404	330					
		R2, R3	1247	3652	7.6	0.073	625	575	525	470	403			
		R3	1556	4558	10.8	0.14	779	740	700	660	615	517	120	
		R3	1710	5009	12.5	0.19	856	821	785	748	710	630	511	424
GB-091-4	1/4	R1	630	1845	2.9	0.013	477	309						
		R1, R2	939	2750	5.7	0.042	711	606	490					
		R2, R3	1247	3652	9.2	0.098	945	866	785	698	604			
		R3	1556	4558	11.8	0.19	1179	1116	1052	988	919	772	504	
		R3	1710	5009	13.4	0.25	1296	1238	1180	1122	1062	934	785	685
GB-101-4	1/4		830	2417	4.5	0.033	703	593	420					
		R3	1165	3393	6.8	0.091	987	905	830	731	578			
		R3, R4	1400	4077	8.9	0.16	1186	1117	1051	989	909	810	633	
		R4	1635	4761	11.1	0.25	1385	1325	1269	1214	1161	1094	1019	792
	1/3	R4	1800	5242	13.2	0.33	1525	1471	1418	1367	1320	1270	1208	1064
GB-121-4	1/4		595	2035	3.3	0.021	722	542						
			820	2804	5.2	0.054	995	877	728					
			1045	3574	7.3	0.111	1268	1177	1078	962	805			
			1395	4770	12.5	0.25	1692	1625	1557	1484	1404	1315	1214	907
	1/3		1550	5300	14.6	0.33	1880	1820	1759	1696	1629	1555	1475	1289
	1/2		1725	5899	17.4	0.5	2093	2038	1984	1928	1871	1810	1743	1600
GB-131	1/4		540	1856	4.2	0.018	766	540						
			720	2474	5.4	0.043	1022	879	650					
			960	3299	7.6	0.103	1362	1262	1144	990				
			1315	4518	13.2	0.26	1866	1794	1718	1637	1545	1435	1305	
	1/3		1440	4948	15	0.35	2044	1978	1911	1838	1759	1674	1571	1299
	1/2		1685	5790	16.9	0.56	2391	2335	2279	2219	2158	2093	2020	1857
GB-141-5	1/4		450	1722	3.9	0.017	834	426						
			710	2718	5.7	0.074	1317	1147	908					
			920	3522	7.7	0.16	1706	1576	1439	1258	961			
			1075	4115	10	0.26	1994	1881	1771	1646	1489	1256		
	1/3		1170	4479	11.4	0.34	2170	2066	1966	1858	1733	1574	1355	
	1/2		1360	5207	14.6	0.53	2522	2433	2346	2258	2166	2062	1942	1602
	3/4		1545	5915	17.6	0.78	2866	2787	2709	2634	2556	2475	2384	2176
	1		1705	6528	20	1.03	3163	3091	3020	2952	2883	2811	2739	2574

MODEL GB - Belt Drive Centrifugal Roof Exhausters

cUL/UL 705 US LISTED

GREENHECK

Performance Data (cont'd)

Model	HP	Range	RPM	TS	Sones	Max BHP	Performance in Inches WG							
							0	0.125	0.25	0.375	0.5	0.625	0.75	1
GB-161-5	1/4		425	1849	4.2	0.029	1255	770						
			625	2720	6.4	0.097	1846	1574	1221					
			865	3764	10.6	0.26	2555	2359	2162	1932	1624			
	1/3		945	4113	12.6	0.34	2791	2612	2433	2236	2009	1692		
	1/2		1100	4787	15.3	0.53	3249	3094	2943	2786	2614	2428	2197	
	3/4		1250	5440	17.9	0.79	3692	3556	3421	3288	3149	2997	2838	
	1		1375	5984	21	1.05	4062	3938	3815	3694	3571	3444	3304	2073
GB-180 LMDX	1/4		495	2397	4.3	0.078	1924	1645	1150					
			730	3535	7.4	0.26	2838	2667	2469	2212	1882			
	1/3		810	3923	8.8	0.35	3149	2997	2832	2623	2375	2052		
	1/2		940	4552	12.7	0.55	3655	3526	3387	3234	3052	2843	2600	
	3/4		1055	5109	16.2	0.77	4102	3989	3866	3741	3596	3432	3251	2811
	1		1185	5739	19	1.1	4607	4507	4400	4290	4179	4045	3900	3575
	1 1/2		1335	6465	22	1.54	5191	5102	5010	4912	4814	4715	4599	4343
	2		1460	7071	26	1.97	5677	5595	5514	5424	5335	5245	5155	4938
GB-200 LMDX	1/4		440	2462	6.5	0.103	2434	1975						
			600	3357	8.5	0.26	3320	2984	2637	2088				
	1/3		665	3721	9.6	0.35	3679	3378	3084	2705	2087			
	1/2		770	4308	12.1	0.55	4260	4013	3744	3477	3140	2643		
	3/4		860	4812	14.1	0.77	4759	4548	4289	4068	3810	3504	3085	
	1		965	5400	16.7	1.09	5340	5157	4927	4719	4519	4285	4015	3239
	1 1/2		1090	6099	20	1.57	6031	5870	5681	5473	5301	5123	4924	4449
	2		1200	6715	24	2.09	6640	6493	6336	6144	5968	5812	5650	5274

MODEL CUBE - Centrifugal Roof Exhausters Belt Drive, Upblast

cUL762 Approved for "Power Vent for Restaurant Appliances"

cUL/UL 705 US LISTED

GREENHECK

Performance Data

Model	HP	RPM	TS	Static Pressure / Capacity 0.000 Sone	0.000 BHP	0.125 Sone	0.125 BHP	0.250 Sone	0.250 BHP	0.375 Sone	0.375 BHP	0.500 Sone	0.500 BHP	0.625 Sone	0.625 BHP	0.750 Sone	0.750 BHP	0.875 Sone	0.875 BHP	1.000 Sone	1.000 BHP
CUBE-101-4	1/4	1205	3509	1025	77.7	957	7.6	872	7.1	782	6.5	661	6.2								
		1455	4237	1238	10.4	1182	10.3	1118	10.0	1047	9.6	973	9.1	893	8.4	775	8.1				
		1660	4834	1413	12.7	1364	12.3	1313	12.0	1251	11.6	1189	11.3	1125	10.8	1055	10.2	974	9.6	860	9.4
CUBE-121-LMD	1/2	1250	4786	2264	12.7	2182	12.7	2086	12.1	1981	12.1	1865	11.7	1731	11.3	1570	11.4	1348	11.2		
		1390	5322	2517	14.9	2445	14.7	2361	14.2	2270	13.2	2173	12.9	2068	12.5	1949	12.1	1817	11.4	1642	11.0
CUBE-141-5	1/2	1250	4786	2264	12.7	2182	12.7	2086	12.1	1981	12.1	1865	11.7	1731	11.3	1570	11.4	1348	11.2		
		1390	5322	2517	14.9	2445	14.7	2361	14.2	2270	13.2	2173	12.9	2068	12.5	1949	12.1	1817	11.4	1642	11.0
CUBE-180-LMD	3/4	1010	891	3815	15.4	3664	15.2	3525	14.9	3402	14.9	3241	14.7	3013	14.0	2798	13.7	2513	12.6	2104	11.8
		1075	5206	4061	16.5	3919	16.2	3786	15.8	3666	15.7	3554	15.5	3344	15.1	3141	14.7	2926	14.2	2652	13.3

Performance Notes:

1. Performance shown is for Model CUBE without ducts.
2. BHP does not include drive losses.

Dimensions (inches)

Model	A	B	C	Roof Opening
CUBE-101	19	24 7/8	23 3/4	14 1/2
CUBE-121	19	24 7/8	23 3/4	14 1/2
CUBE-141	22	28 7/8	24 3/4	18 1/2
CUBE-180	30	35 7/8	28 5/8	20 1/2
CUBE-200	30	35 5/8	28 5/8	20 1/2

amca CERTIFIED RATINGS SOUND AIR PERFORMANCE AIR MOVEMENT AND CONTROL ASSOCIATION, INC.

Greenheck Fan Corporation certifies that the CUBE and CUBE-HP models shown herein are licensed to bear the AMCA Seal. The ratings shown are based on tests made in accordance with AMCA Standard 210 and AMCA Standard 300 and comply with the requirements of the AMCA Certified Ratings program.
The sound ratings shown were obtained in accordance with AMCA Standard 300 fig. 2. Loudness values in sones at a distance of 5 feet were calculated in accordance with AMCA Standard 301. The AMCA Certified Ratings Sound Seal applies to sone ratings only.

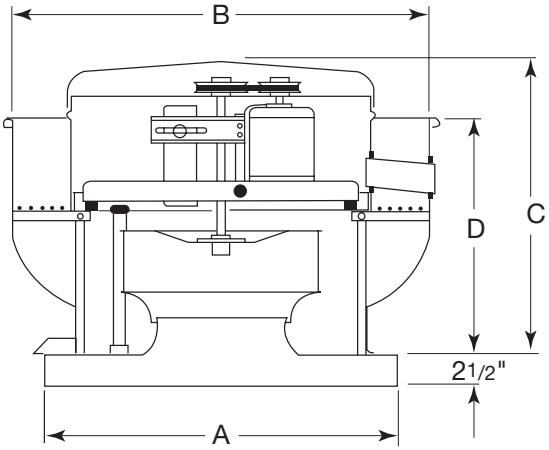

Greenheck Roof Exhausters

Model CUBE

Model CUBE is designed for restaurant/commercial kitchen ventilation by exhausting hot and contaminated air up and away from the building.

UL 762 listed for restaurant applications and operation up to 300°F (UL 762 includes UL 705 listing).

Stock Note (Model CUBE-101-4 and CUBE-141-5):

- The units listed are supplied with 115/60/1 motors installed.
- Units are supplied preset for maximum RPM and are field adjustable.

Stock Note (Model CUBE-180-LMD and CUBE-200):

- For the unit listed, the motor and drive are not included.

MODEL GPI - Prefab Roof Curbs

Performance Data

Model Curb	Fan Model & Size			Dimensions					
GPI with Damper Tray	G	GB	CUBE	Curb Cap (Sq.)	AD (Sq.)	B (Sq.)	Roof Opening (Sq.)	Damper Size (Sq.)	Galv. Steel Gauge
GPI-17-G12	060-075			17	15 1/2	23 1/2	10 1/2	8	18
GPI-17-G12	080-095			17	15 1/2	23 1/2	12 1/2	10	18
GPI-19-G12		071-131	101,121,131	19	17 1/2	25 3/4	12 1/2	12	18
GPI-22-G12		141,161	141,161	22	20 1/2	28 3/4	14 1/2	16	18
GPI-30-G12		180, 200	180, 200	30	28 1/2	36 3/4	20 1/2	18	18
GPI-34-G12		220,240		34	32 1/2	40 3/4	26 1/2	24	18

Note: GPI curbs must be roofed and flashed to the top of the wooden nailer to assure weather tightness.

Damper Installation

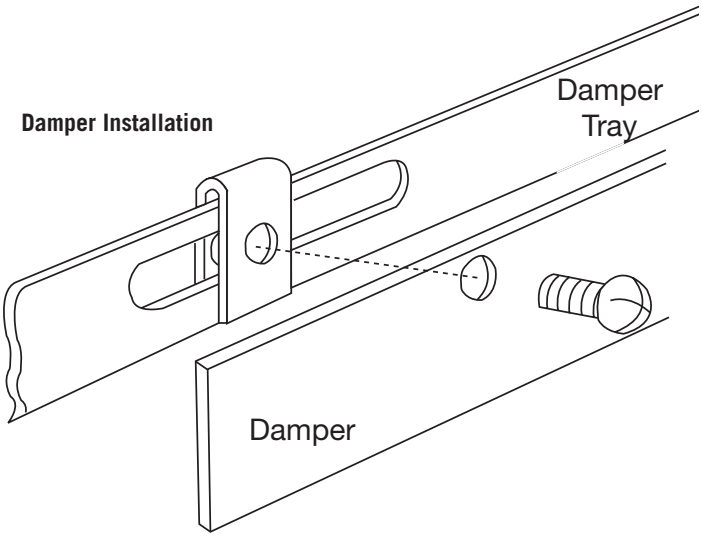

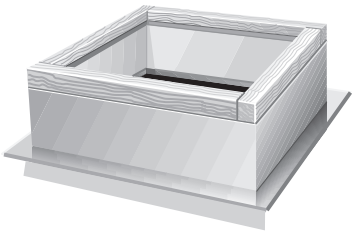

Prefab Roof Curbs

Model GPI

This curb is designed for roof decks that are covered with 2-6" of insulation. Model GPI is for use on flat roofs. All are mounted directly to the roof deck before the insulation is applied, then roofed and flashed to the top of the wood nailer for weather tightness.

Construction

Models GPI, GPIP and GPIR are available in aluminum (.064) or galvanized steel (18 ga.) and are all welded, with 1" insulation (3# density).

Available Heights

GPI Models: 12"

Damper Installation

When damper trays are specified, mounting holes and attaching devices are provided for installation of backdraft dampers.

Construction

Welded galvanized steel.

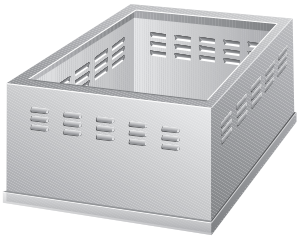

Vented Curb Extension Model VCE

The VCE Vented curb extension is designed for use with an 8" high roof curb and the Greenheck Model CUBE Fan to provide the required 40" minimum discharge height above the roof line (per NFPA 96).

MODEL CW - Centrifugal Sidewall Exhausters Direct Drive

cUL/UL 705 US LISTED

GREENHECK

Greenheck Centrifugal Sidewall Exhausters

Dimensions (inches)

Model	A	B	C	Wall Opening	Damper Size	Damper Frame Size	Mtg. Bolt Circle
CW 065-075	18 3/8	13 1/2	14 3/4	8 1/2 x 8 1/2	8 x 8	10 x 10	11 3/4
CW 080-090	21	13 3/8	17 7/8	10 1/2 x 10 1/2	10 x 10	12 x 12	15
CW 095	21	15 1/4	17 7/8	10 1/2 x 10 1/2	10 x 10	12 x 12	15
CW 101-121	24 7/8	23 3/4	19 3/4	12 1/2 x 12 1/2	12 x 12	14 x 14	16 7/8
CW 141	28 7/8	24 3/4	22 1/8	15 1/2 x 15 1/2	15 x 15	17 x 17	19 3/8

Model CW

The CW models are direct drive centrifugal sidewall exhausters designed to meet the stringent requirements of today's engineers, specifiers, designers, contractors and customers. These units feature "engineered in" performance, efficiency, quietness, rugged cosntruction and lasting quality.

Stock Note:

- The units listed are supplied with 115/60/1 motors installed.
- All stocked CW units can be used with 5W speed control for variable performance requirements.

amca CERTIFIED RATINGS — SOUND and AIR PERFORMANCE — AIR MOVEMENT AND CONTROL ASSOCIATION, INC.

Greenheck Fan Corporation certifies that the CWand CWB models shown herein are licensed to bear the AMCA Seal. The ratings shown are based on tests made in accordance with AMCA Standard 210 and AMCA Standard 300 and comply with the requirements of the AMCA Certified Ratings program.
The sound ratings shown were obtained in accordance with AMCA Standard 300 fig. 2. Loudness values in sones at a distance of 5 feet were calculated in accordance with AMCA Standard 301. The AMCA Certified Ratings Sound Seal applies to sone ratings only.

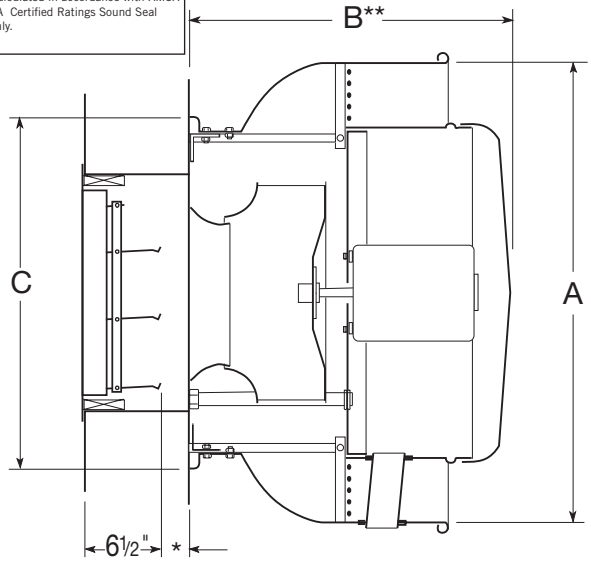

*Note: 2 inches minimum, 5 inches when motorized damper is required.

MODEL CW- Centrifugal Sidewall Exhasuters Direct Drive

cUL/UL 705 US LISTED

GREENHECK

Performance Data

Model		HP	RPM	TS	Static Pressure / Capacity 0.000 Sone	0.000 BHP	0.100 Sone	0.100 BHP	0.125 Sone	0.125 BHP	0.250 Sone	0.250 BHP	0.375 Sone	0.375 BHP	0.500 Sone	0.500 BHP	0.625 Sone	0.625 BHP
CW-070	CW-070-E	1/100	1050	2234	250	2.6	193	1.6	172	1.4								
						.007		.008		.008								
	CW-070-G	1/60	1300	2765	309	4.0	267	3.4	255	3.3	152	2.4						
						.014		.015		.015		.013						
	CW-070-D	1/30	1550	3297	369	5.5	334	5.2	325	5.1	269	4.7	160	3.9				
						.012		.025		.025		.026		.022				
CW-075	CW-075-E	1/80	1050	2234	287	3.4	210	2.8	188	2.7								
						.012		.012		.012								
	CW-075-G	1/50	1300	2765	356	4.0	294	3.7	279	3.7	185	3.4						
						.023		.023		.024		.021						
	CW-075-D	1/25	1550	3297	424	6.0	371	5.4	359	5.3	291	4.9	204	4.8				
						.039		.039		.039		.039		.035				
CW-080	CW-080-E	1/40	1050	2990	325	3.8	265	3.7	248	3.6	133	4.2						
						.012		.014		.015		.016						
	CW-080-G	1/30	1300	3701	403	5.4	356	5.4	343	5.4	272	5.5	173	5.9				
						.022		.025		.026		.031		.031				
	CW-080-D	1/20	1550	4413	481	7.3	441	7.4	431	7.3	376	7.2	314	7.3	235	7.6		
						.037		.041		.042		.048		.052		.053		
CW-085	CW-085-E	1/40	1050	2990	389	4.0	323	3.9	305	3.9	182	4.3						
						.012		.016		.017		.018						
	CW-085-G	1/30	1300	3701	481	5.4	430	5.3	416	5.3	340	5.3	235	5.5				
						.024		.027		.029		.034		.035				
	CW-085-D	1/20	1550	4413	574	7.5	532	7.4	520	7.4	461	7.4	395	7.5	312	7.6	161	8.1
						.040		.044		.045		.052		.058		.061		.051
CW-090	CW-090-E	1/40	1050	2990	549	4.1	470	3.9	451	3.9	306	4.2						
						0.19		.023		.024		.027						
	CW-090-G	1/25	1300	3701	680	5.5	616	5.4	600	5.4	516	5.4	391	5.6				
						.035		.041		.042		.048		.052				
	CW-090-D	1/15	1550	4413	811	7.8	757	7.6	744	7.6	677	7.5	603	7.4	501	7.4	347	7.8
						.060		.066		.068		.076		.082		.087		.084
CW-095	CW-095-E	1/30	1050	2990	711	5.3	603	4.5	570	4.5	381	4.5						
						.032		.036		.037		.037						
	CW-095-G	1/12	1300	3701	880	7.5	797	6.8	774	6.7	641	6.4	484	6.4	199	6.8		
						.061		.066		.067		.072		.071		.054		
	CW-095-D	1/8	1550	4413	1049	9.6	983	9.3	964	9.3	861	8.5	747	8.3	616	8.1	443	7.8
						.10		.11		.11		.12		.12		.12		.11
CW-101	CW-101-B	1/12	1140	3320	970	7.2	897	7.0	806	6.5	707	6.0						
						.07		.08		.08		.09						
CW-121	CW-121-B	1/12	1140	3898	1346	7.4	1261	7.9	1180	8.2	1091	8.2	981	8.0	833	8.1		
						.11		.12		.13		.13		.14		.14		
CW-141	CW-141-B	1/12	1140	3898	1346	7.4	1261	7.9	1180	8.2	1091	8.2	981	8.0	833	8.1		
						.11		.12		.13		.13		.14		.14		

Performance Notes: Performance shown is for Model CW without ducts.

MODEL CWB - Centrifugal Sidewall Exhausters Belt Drive

cUL762 Approved for "Power Vent for Restaurant Appliances"

Performance Data

Model	HP	Min/Max RPM	Sones at 0 in.	Static Pressure in Inches of W.G. 0.000 Sone	0.000 BHP	0.125 Sone	0.125 BHP	0.250 Sone	0.250 BHP	0.375 Sone	0.375 BHP	0.500 Sone	0.500 BHP	0.750 Sone	0.750 BHP	1.000 Sone	1.000 BHP
CWB 141-LMD	1/2	590 5	1069 851	5.0	0.04	4.5	0.04										
	1	1725	26	3125 26.0	0.87	3066 23.0	0.87	3005 22.0	0.90	2936 24.0	0.92	2865 24.0	0.94	2711 15.1	0.97	2539 14.3	1.00
CWB 180-LMD	1/4	630	7.1	2380 7.1	0.13	2154 6.4	0.51	1861 15.5	0.16								
	2	1495	28	5648 28.0	1.80	5546 27.0	1.84	5443 27.0	1.89	5254 26.0	1.96	5082 25.0	2.02	4598 24.0	2.10	3983 22.0	2.06

Performance Notes:
1. Performance shown is for Model CWB without ducts.
2. BHP does not include drive losses.

Greenheck Fan Corporation certifies that the CW and CWB models shown herein are licensed to bear the AMCA Seal. The ratings shown are based on tests made in accordance with AMCA Standard 210 and AMCA Standard 300 and comply with the requirements of the AMCA Certified Ratings program.
The sound ratings shown were obtained in accordance with AMCA Standard 300 fig. 2. Loudness values in sones at a distance of 5 feet were calculated in accordance with AMCA Standard 301. The AMCA Certified Ratings Sound Seal applies to sone ratings only.

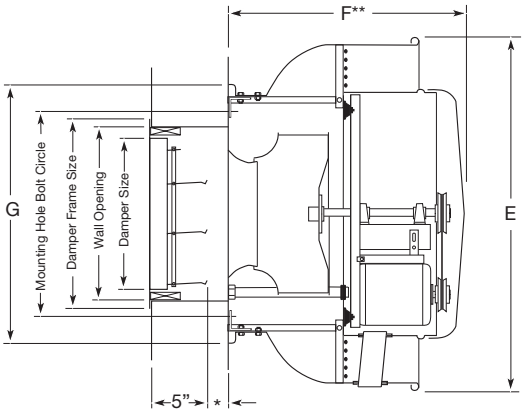

Greenheck Centrifugal Sidewall Exhausters

Model CWB

These fans are ideal for exhausting contaminated air out and away from buildings. Fan wheels shall be centrifugal, backward inclined, and constructed of aluminum.

Model CW Sidewall Exhaust fans are the centrifugal direct drive type.

Model CWB Sidewall Exhaust fans are the centrifugal belt drive type. Adjustable motor pulleys allow for final system balancing.

* Note: 2 inches minimum, 5 inches when motorized damper is required.

Dimensions (inches)

Model	E	F	G	Wall Opening	Damper Size
CWB 141-LMD	28 7/8	24 3/4	22 1/8	14 1/2 x 14 1/2	15 x 15
CWB 180-LMD	35 3/8	28 5/8	27 3/4	18 1/2 x 18 1/2	17 x 17

* CWB-101, 141, 180 stocked less motor & drives. Contact your Price Rep for available Motor / Drive options.

MODEL SQ- Centrifugal Inline Fans Direct Drive

cUL/UL 705 US LISTED

GREENHECK

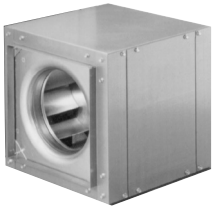

Greenheck Centrifugal Inline Fans

Dimensions (inches)

Model	Unit Size				
	A	B	C	D	E
SQ70-75	13	12	$8^{7}/_{8}$	N/A	1
SQ80-95	16	15	$11^{7}/_{8}$	N/A	1

- Hanging Vibration Isolation Kits - HVI 6-14
- Insulation Kits

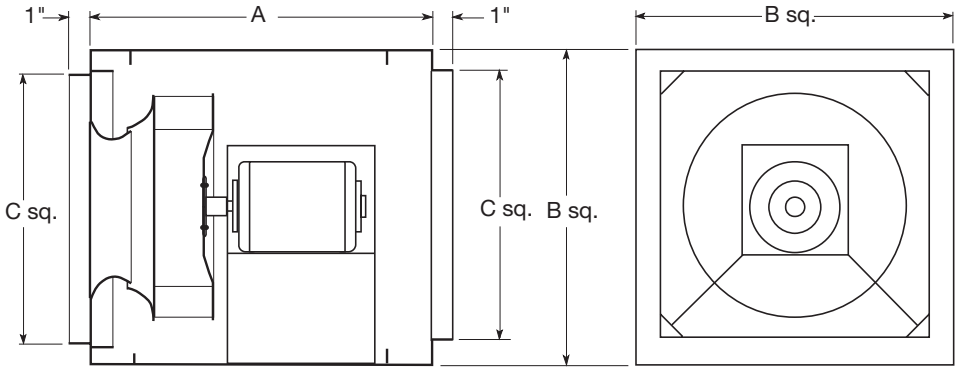

amca CERTIFIED RATINGS SOUND AND AIR PERFORMANCE AIR MOVEMENT AND CONTROL ASSOCIATION, INC.

Greenheck Fan Corporation certifies that the SQ and BSQ models shown herein are licensed to bear the AMCA Seal. The ratings shown are based on tests made in accordance with and procedures performed in accordance with AMCA Publication 211 and AMCA Publication 311 and comply with the requirements of the AMCA Certified Ratings program.

Model SQ

Units are stocked with 115/60/1 motors mounted. All can be used with a speed control and offer thermal overload protection. SQ-70 through SQ-95 are equipped with 3 speed motors, field wired for either 1050, 1300 or 1500 RPM.

General

Models SQ and BSQ inline duct fans are designed for intake, exhaust, return or makeup air systems that require high efficiency mounting versatility, low sound levels and ease of service. The square, compact housing design permits mounting in any position, whether horizontal, vertical or at any angle. Two removable panels provide access for service. Models SQ and BSQ are licensed to bear the AMCA Certified Ratings Seals for Sound and Air Performance. All stock SQ and BSQ sizes are UL listed.

Construction Features

- Galvanized steel housing, aluminum wheel.
- Two removable service panels.
- Formed collars for duct connection at inlet and outlet.
- Flexible motor leads and combination junction box and disconnect switch (standard).
- c/w insulated housing (optional).
- Disconnect switch

MODEL SQ - Centrifugal Inline Fans Direct Drive

cUL/UL 705 US LISTED

GREENHECK

Performance Data

Model	HP	RPM	TS	Sones @0 in.	Max BHP	Performance in Inches WG						
						0	0.1	0.125	0.25	0.375	0.5	0.625
SQ-70-E	1/110	1050	2233	2.7	0.010	212	140	118				
SQ-70-G	1/50	1300	2765	4.1	0.020	262	204	190				
SQ-70-D	1/30	1550	3297	5.6	0.030	313	265	252	189			
SQ-75-E	1/90	1050	2233	3.6	0.011	241	167	146				
SQ-75-G	1/45	1300	2765	4.1	0.210	298	239	224	133			
SQ-75-D	1/25	1550	3297	6.1	0.035	356	306	294	229	137		
SQ-80-E	1/50	1050	2989	3.8	0.016	306	241	225	104			
SQ-80-G	1/30	1300	3701	5.4	0.032	378	324	312	244	140		
SQ-80-D	1/15	1550	4412	7.3	0.055	451	405	394	342	280	201	
SQ-85-E	1/140	1050	2989	4.0	0.017	357	291	272	142			
SQ-85-G	1/30	1300	3701	5.5	0.033	442	391	377	298	185		
SQ-85-D	1/15	1550	4412	7.6	0.057	528	485	474	413	343	254	
SQ-90-E	1/50	1050	2989	4.0	0.020	500	399	369	188			
SQ-90-G	1/25	1300	3701	5.4	0.040	619	539	519	397	245		
SQ-90-D	1/10	1550	4412	7.6	0.068	738	673	654	564	457	334	
SQ-95-E	1/30	1050	2989	4.9	0.031	623	507	475	274			
SQ-95-G	1/15	1300	3701	7.6	0.059	771	684	659	522	352		
SQ-95-D	1/8	1550	4412	9.6	0.100	919	852	829	720	603	461	276

MODEL BSQ- Centrifugal Inline Fans Belt Drive

cUL/UL 705 US LISTED

GREENHECK

Greenheck Centrifugal Inline Fans

Dimensions (inches)

Model	A	B	C	D
BSQ80, BSQ90	21	15	$11^{7}/_{8}$	9
BSQ100	21	17	$13^{7}/_{8}$	9
BSQ120	21	19	$15^{7}/_{8}$	9
BSQ140-LMDX	22	23	$19^{7}/_{8}$	9

- Hanging Vibration Isolation Kits - HVI & HSI
- Insulation Kits

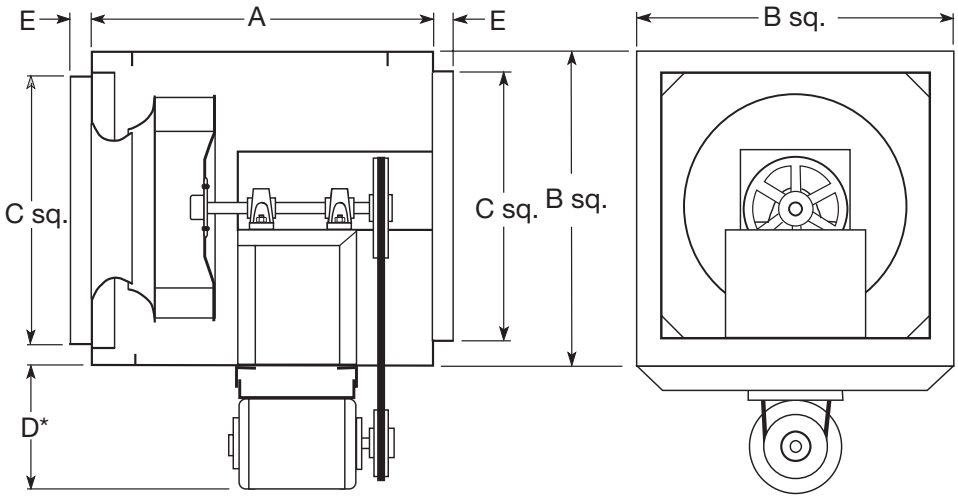

Greenheck Fan Corporation certifies that the SQ and BSQ models shown herein are licensed to bear the AMCA Seal. The ratings shown are based on tests made in accordance with and procedures performed in accordance with AMCA Publication 211 and AMCA Publication 311 and comply with the requirements of the AMCA Certified Ratings program.

Model BSQ

General

Models SQ and BSQ inline duct fans are designed for intake, exhaust, return or makeup air systems that require high efficiency mounting versatility, low sound levels and ease of service. The square, compact housing design permits mounting in any position, whether horizontal, vertical or at any angle. Two removable panels provide access for service. Models SQ and BSQ are licensed to bear the AMCA Certified Ratings Seals for Sound and Air Performance. All stock SQ and BSQ sizes are UL listed.

Construction Features

- Galvanized steel housing, aluminum wheel.
- Two removable service panels.
- Formed collars for duct connection at inlet and outlet.
- Flexible motor leads and combination junction box and disconnect switch (standard).
- BSQ motors, bearings and drives are mounted out of the airstream and are cooled by ambient air.
- c/w insulated housing (optional).
- Disconnect switch.

MODEL BSQ- Centrifugal Inline Fans Belt Drive

cUL/UL 705 US LISTED

GREENHECK

Performance Data

Model	HP	RPM	Performance in Inches WG							
			.125	.25	.375	.5	.625	.75	1	1.25
BSQ-80-4	1/4	1050	371	297						
		1430	544	499	447	386	322			
		1835	720	687	651	614	571	525	425	
BSQ-90-4	1/4	1050	546	443						
		1440	805	741	669	588	480			
		1695	965	914	858	798	730	654		
BSQ-100-4	1/4	1050	774	671						
		1265	966	983	798	683				
		1610	1266	1207	1149	1089	1004	917		
BSQ-120-4	1/4	1000	1025	913	782					
		1210	1283	1192	1098	992	860			
		1370	1475	1395	1315	1230	1135	1025		
BSQ-140-LMDX		800	1362	1185	859					
	1/4	1075	1925	1807	1679	1535	1306			
	1/3	1080	2132	2028	1915	1795	1615	1442		
	1/2	1355	2474	2389	2295	2195	2092	1976	1630	
	3/4	1550	2852	2781	2702	2619	2531	2442	2245	1954
	1	1710	3160	3096	3029	2954	2879	2800	2637	2453
	1 1/2	1960	3640	3584	3528	3469	3403	3338	3201	3059
	2	2135	3974	3871	3820	3763	3763	3803	3583	3454

MODEL SE1- Direct Drive Sidewall Propeller Fans

cUL/UL 705 US LISTED

GREENHECK

Dimensions (inches)

Fan Size	A Panel Sq.	B	C*	D	E	Damper Size Sq.
8	13 1/8	7	5	1	8 3/8	10
12	18 1/8	10 3/4	8 1/4	1	12 3/8	14
18	24 1/8	14	10 7/8	1	18 3/8	20

*Varies with motor selection

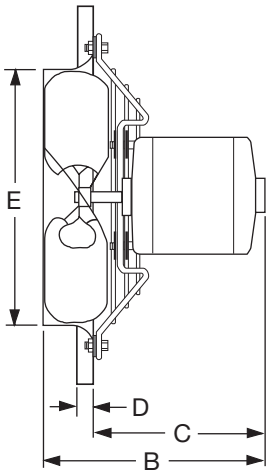

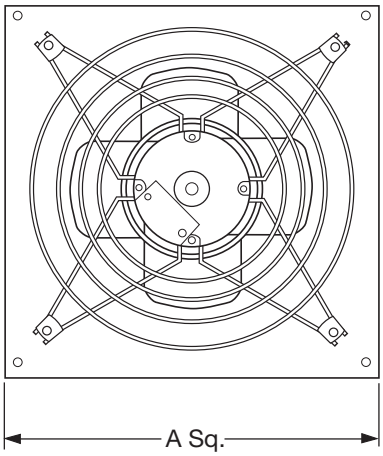

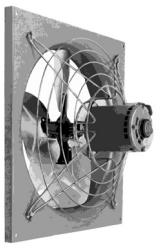

Greenheck Direct Drive Fans

Model SE1

Standard Features:

- All SE1 motors have thermal overload protection.
- SE1-8 and 12 are equipped with 3 speed motors, field wired to the selected RPM.
- All stocked SE1 units can be used with a 5w speed control.

Stock Note:

- Units stocked with 115 / 60 / 1 motors.

amca CERTIFIED RATINGS SOUND and AIR PERFORMANCE AIR MOVEMENT AND CONTROL ASSOCIATION, INC.

Greenheck Fan Corporation certifies that the SE1 models shown herein are licensed to bear the AMCA Seal. The ratings shown are based on tests made in accordance with AMCA Publication 210 and comply with the requirements of the AMCA Certified Ratings program.

Performance Data

Model		RPM	Static Pressure Capacity 0"SP	1/10"SP	1/8" SP	1/4" SP
SE1-8-QD 3 Speed	E	1050	311	126	100	
	G	1350	399	256	198	
	D	1550	459	351	307	167
SE1-12-QD 3 Speed	E	1050	981	744	678	
	G	1350	1262	1097	1037	
	D	1550	1449	1309	1271	1042
SE1-18-B4-QD	B4	1160	3238	2987	2908	2434

Note: Performance shown is for model SE1 exhaust without ducts.

WD - Motorized or Automatic Backdraft Dampers

WD-100

Model WD-100 dampers are designed for use with all Greenheck roof mounted exhaust fans.

Damper Size Sq.	B	Fan Model & Size G	GB	CUBE
8 x 8	4 5/8	65, 70, 75		
10 x 10	5 5/8	80, 85, 90, 95		
12 x 12	6 5/8			100
16 x 16	6 3/8			140
18 x 18	5 3/8		180	180
24 x 24	6 1/8		200, 240	

Dimension "C": 10" maximum.
* Actual dimension is 1/8" smaller than nominal

* Damper shown with Optional Motors See Page 41.

WD-323

Model 323 dampers are designed for vertical mounting and use with Greenheck's centrifugal sidewall exhausters

Damper Size Sq.	Fan Model & Size CWB
8 x 8	65, 70, 75
10 x 10	80, 85, 90, 95
12 x 12	101
15 x 15	141

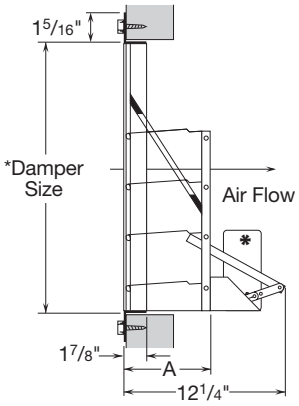

* Damper shown with Optional Motors See Page 41.

WD-323

WD-320

Damper Size Sq.	Fan Model & Size
10 x 10	SE1 - 8
14 x 14	SE1 - 12
20 x 20	SE1 - 18

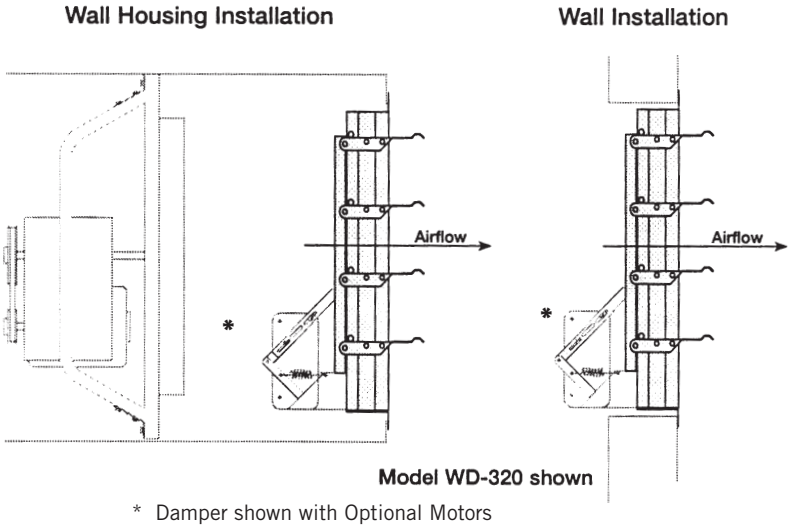

* Damper shown with Optional Motors

MP - Motor Packs

MP-100

MP-100 motor packs shall be used with all
Note: Use with WD-100 motorized exhaust dampers.

- Motor
- Motor Bracket
- Motor Arm Assembly
- Connecting Link
- Motor Spring

MP-300

MP-300 motor packs shall be used with all

Note: Use with WD-300 motorized exhaust dampers.

- Motor
- Motor Bracket
- Motor Arm Assembly
- Connecting Link
- Motor Spring

GREENHECK

Type I Hoods

Type I hoods are used for collecting and removing grease vapors and smoke. They are available in wall, double island and single island styles.

MODEL G __ __ __ ***CANOPY HOOD***
(Filter) (Supply) (Style)

For model designation add the appropriate suffix, i.e. GHEW

FILTER TYPE
- ❑ ***G*** - Grease Grabber™
- ❑ ***X*** - Grease-X-Tractor™
- ❑ ***H*** - Baffle
- ❑ ***K*** - High Velocity Cartridge

SUPPLY
- ❑ ***E***xhaust Only ❑ ***F***ace
- ❑ ***C***ombination Face & Air ❑ ***S***hort Circuit

STYLE
- ❑ ***W***all ❑ ***D***ouble Island ❑ ***V***-Bank (Single Island)

- ❑ UL/cUL Listed without Fire Damper

STANDARD FEATURES

- UL/cUL Listed and NSF Certified
- 18 Ga. 304 SS or 430 SS construction
- Integral 3 in. airspace for clearance to limited combustibles

SERVICE CHART

All hoods are available in 5 or 10 days depending upon the accessories chosen.

5 DAY ACCESSORIES

- Light / Fan switches, hood or remote mounted
- Duct collars shipped loose (factory attached std.)
- Filler panels for clearance to limited combustibles
- Enclosure panels to span between hood and ceiling
- Kitchen fan control center

10 DAY ACCESSORIES

- Stainless steel backsplash panel, (non) insulated
- End skirts for improved capture and performance
- Insulated supply plenum
- Exhaust air balancing baffle
- Fire cabinet - utility cabinet
- Fire suppression system - full or prepiped
- Trim strips

Style

WALL STYLE

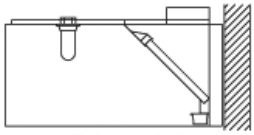

E xhaust Only

Sizes Available	
Length	36 in. to 192 in.
Width	39 in. to 60 in.
Height	24 in. or 30 in.

DOUBLE ISLAND

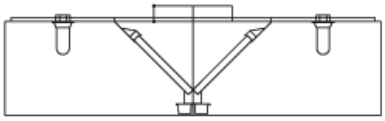

E xhaust Only

Sizes Available	
Length	36 in. to 192 in.
Width	72 in. to 120 in.
Height	24 in. or 30 in.

SINGLE ISLAND V-BANK

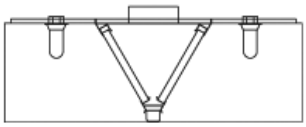

E xhaust Only

Sizes Available	
Length	36 in. to 192 in.
Width	48 in. to 78 in.
Height	24 in. or 30 in.

Filter Types

The Grease Grabber™ (stainless steel) two-stage filtration system is utilized in conjunction with the Grease-X-Tractor™ to be 80% efficient. UL/cUL 1046 Classified and NSF Certified.

The Grease-X-Tractor™ high efficiency stainless steel or aluminum filters have twice the grease extraction capability of a baffle filter. The filters shall be UL/cUL 1046 Classified and NSF Certified.

Aluminum or stainless steel baffle type are the traditional choice for inexpensive grease removal. The filters shall be UL/cUL 1046 Classified.

The high velocity stainless steel cartridge filters offer dry cartridge performance with lower cost. The filters shall be UL/cUL 1046 Classified and NSF Certified.

Supply Plenums

Internal

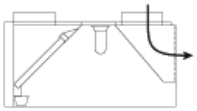

Face Supply hood(s) full compensating model with the capability to replace exhausted air with outside air.

External

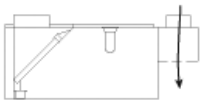

Air Curtain Supply Plenum introduces air in a downward pattern that contains contaminated air while providing cooling to the cooks.

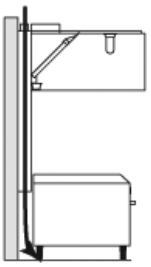

Back Supply Plenum introduces air below and behind the cooking equipment allowing air to rise and mix with room air.

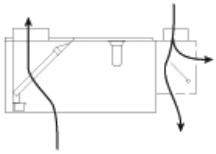

Variable Supply Plenum distributes air out into the kitchen through the face and/ or introduces air down onto cooking personnel through the curtain.

GREENHECK

Type II Hoods

Type II hoods are used for collecting and removing steam, vapor, heat and odors. They are used for non-grease applications including heat and condensate hood models.

SERVICE CHART	5 DAY	10 DAY
GO, GD1, GD2, GD3	✓	✓

Model GD1
Condensate Hood, No Baffles

The GD1 Hood is designed for light condensate applications. The lack of baffles means the duct collar can be freely positioned - a design plus.

Model GD2
Condensate Hood, 1 Baffle

The GD2 Hood is designed for moderate condensate applications. With one baffle, the duct collar position can be adjusted.

Model GD3
Condensate Hood, 2 Baffles

The GD3 Hood is designed for heavy condensate applications. The baffles catch and drain all moisture - no drips.

Model GO
Oven Hood

The GO Hood is designed to capture heat and vapor, creating a more comfortable environment for the cooking staff.

The Complete Solution in 10 Days or Less

Greenheck is a single source manufacturer of a complete, flexible kitchen system. Our patented methods of grease extraction are some of the most efficient in the industry, resulting in energy savings and low maintenance costs.

1. **KITCHEN HOODS** - See pages 96-97
2. **MAKE-UP AIR UNITS** -
   KSFD, KSFB, KSF, DG, DGX, IG, IGX - See pages 84-89
3. **EXHAUST FANS** -
   CUBE - See pages 16-19
   CWB - See pages 23-26
   SWB - See pages 55-58
   TCB - See page 46
4. **ROOF CURBS & EXTENSIONS** - See pages 114-115

CODE INFORMATION

Greenheck Kitchen Hoods are built in accordance with the following codes, standards, and recommended practices.

- UL/cUL 710 Listed
- NFPA 96
- BOCA
- NSF
- SBCCI
- IMC

GREENHECK

Energy Recovery Ventilators - ERV

Energy Recovery Ventilators pre-condition outdoor air to near room conditions. Fresh outdoor air flows through one side of the unit, while stale exhaust air from the building flows through the other side. An energy recovery wheel rotates between the two airstreams, transferring temperature and moisture properties. In the summer, this transfer reduces the temperature and moisture level of the outdoor air. Likewise in the winter, this transfer increases the temperature and moisture of the outdoor air. The overall effect is a significant reduction in the amount of energy used to condition the outdoor air. All ERV models can be roof mounted or mounted indoors for clean air applications up to 130ºF. Energy recovery ventilators are primarily used in institutional and commercial air conditioned applications.

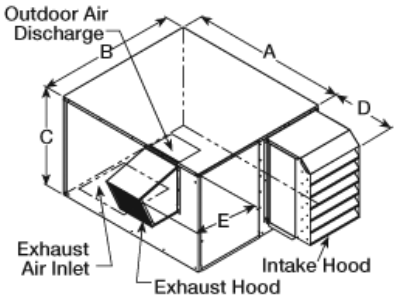

SERVICE CHART	10 DAY
ERV All Models	✓

PERFORMANCE

Performance capabilities 500 cfm to 6000 cfm and up to 1½ in. wg of external static pressure.

STANDARD CONSTRUCTION FEATURES

- Galvanized steel construction
- AMCA Certified Air Performance
- Total enthalpy wheel certified to ARI Standard 1060
- 1 in. foil face insulation
- Forward curved blowers
- Single point wiring
- Motor starters
- Non-fused disconnect

ERV DIMENSIONAL DATA

MODEL	EXTERIOR DIMENSIONS					WEIGHT (LBS.)	CURB OUTSIDE DIMENSIONS
	A	B	C	D	E		
ERV-251	46	34	27	12	8	340	42½ x 30½
ERV-361	62	51	34	18	15	860	58½ x 47½
ERV-521	67	67	44	16	15	1290	63½ x 63½
ERV-581	75	70	67	16	22	1470	71¾ x 66

All dimensions in inches.

OPTIONS AND ACCESSORIES

- Fresh air & exhaust air filters, 2 in. pleated (30% eff.)
- Supply & exhaust dampers
- Roof curbs
- Listed to UL-1995 (open motors only)
- Enthalpy sensor (Economizer)
- Temperature sensor (Economizer)
- Timed exhaust frost control
- Duct flanges
- Hinged access doors (361, 521, 581 only)
- Weatherhood
- Dirty filter sensor
- Service outlet
- Permatector

BENEFITS FOR BUILDING OCCUPANTS AND OWNERS

- Humidity control
- Reduced latent load on air conditioning equipment
- Improved indoor air quality of building
- Increased comfort of building occupants
- Reduced ventilation costs by as much as 75% producing year round energy savings
- Eliminates problems associated with high indoor moisture levels

APPLICATION OF ERVs

Energy recovery technology is well suited for commercial and institutional applications such as classrooms, offices, meeting rooms, condominiums and assisted living facilities.

For complete product information refer to catalog Model ERV, Energy Recovery Ventilators, or contact your local representative.

ARI PERFORMANCE CERTIFIED

ARI Standard 1060

Energy recovery wheels certified by the ARI Air-to-Air Energy Recovery Ventilation Equipment Certification Program in accordance with ARI Standard 1060. Actual performance in packaged equip-ment may vary. Certified Ratings are available in the Certified Product Directory at http://www.aridirectory.org/ari/erv.php

C ETL LISTED US

Intertek

Greenheck Fan Corporation certifies that the ERV models shown herein are licensed to bear the AMCA seal. The ratings shown are based on tests and procedures performed in accordance with AMCA publication 211 and comply with the requirements of the AMCA Certified Ratings Program.

GREENHECK

Energy Recovery Ventilators - ERV

SERVICE AND MAINTENANCE

ERVs are engineered for minimal maintenance and have numerous panels for easy access to internal components requiring maintenance. Outdoor air and exhaust airstreams typically have throwaway filters that need to be replaced on a regular schedule. The energy wheel is segmented and slides out to allow personnel to transport the wheel segments to a convenient location for cleaning. While the wheel should be checked annually, cleaning is required only once every 2-3 years, and mild detergent and water is all that is required.

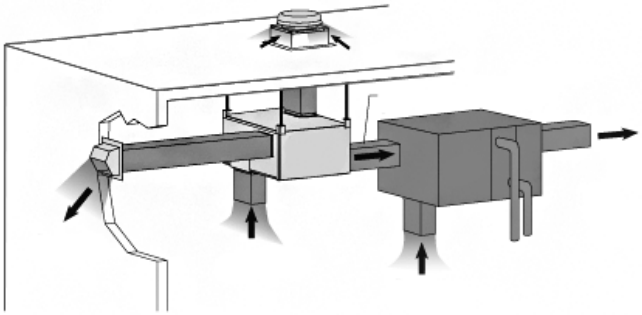

Energy Recovery Ventilators - MiniVent 450 & 750

The MiniVent is an energy recovery ventilator for commercial and institutional applications that require 300 cfm to 800 cfm of ventilation air. The compact design provides an economical solution for individual spaces, such as school classrooms and small offices.

The MiniVent is designed for indoor installations and may be floor mounted or ceiling hung. A removable panel enables easy access to filters and enthalpy wheel.

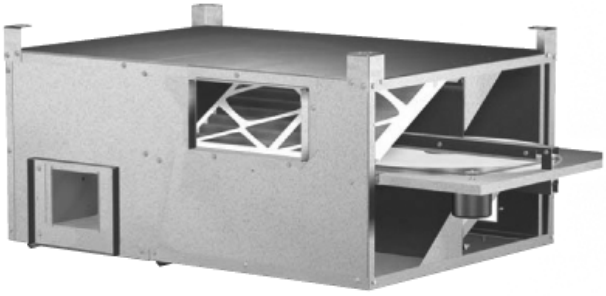

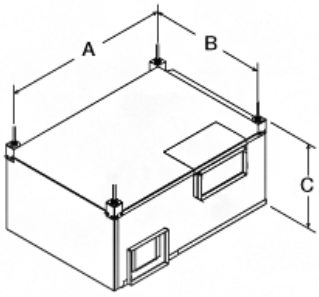

STANDARD CONSTRUCTION FEATURES

- Galvanized steel construction
- Total enthalpy wheel certified to ARI Standard 1060
- Forward curved blower
- Single point wiring
- 1 in. pleated filters
- Insulated
- Listed to UL-1995

ACCESSORIES

- Intake and exhaust accessories GRS and GRSF (see page 91)
- Wall mount accessories BV-Brick Vent and WC-Wall Cap
- Speed control
- Motion detector (MiniVent 450 only)
- Hanging vibration isolator kits

SERVICE CHART	IN STOCK	10 DAY
MiniVent-450, 750	✓	✓

PERFORMANCE

Performance capabilities 300 cfm to 800 cfm and 1 in. wg of external static pressure.

MINIVENT DIMENSIONAL DATA

MODEL	EXTERIOR DIM.			WEIGHT (LBS.)
	A	B	C	
450	40	29	20	150
750	46	36	22	210

All dimensions in inches.

For complete product information refer to catalog Model MiniVent, Energy Recovery Ventilators, or contact your local representative.

GREENHECK

Direct Fired Gas - Make-Up Air Systems - DGK, DG, and DGX

The Greenheck models DGK, DG and DGX are designed to provide heated make-up air for commercial and industrial applications. The direct gas-fired burner provides a 100% efficient heating system with an ETL label. Airflow capacities up to 15,000 cfm and heating capacities up to 1,600,000 Btu/Hr are available. Installation may be stand alone or on a combination package with exhaust fan on a common curb.

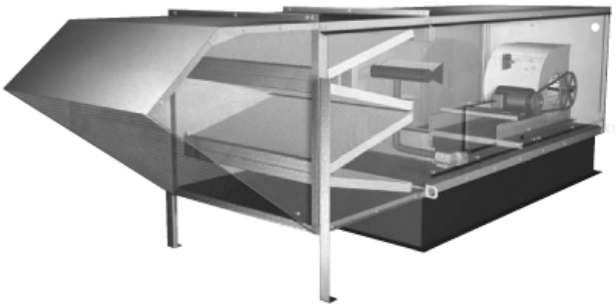

SERVICE CHART	3 DAY	5 DAY	10 DAY
DGK - Housing 15	✓	✓	✓
DG - Housings 10, 20, 30		✓	✓
DGX - Housings 12, 22, 32			✓

PERFORMANCE

Performance capabilities are 15,000 cfm with up to 2 in. of wg of static pressure.

STANDARD CONSTRUCTION FEATURES

- Galvanized steel construction
- Control center with starter and disconnect
- Vibration isolation
- Factory wired and tested
- ETL label
- V-bank filters (DG & DGX)

OPTIONS AND ACCESSORIES

DGK	DG	DGX	OPTIONS AND ACCESSORIES
■	■	■	Insulated Housing
	■	■	Air Filter Gauge
■	■	■	Intake Dampers
■	■	■	Gas Pressure Regulator
■	■	■	Fiberglass Insulation
■	■	■	Inlet Air Sensor
	■	■	Combination Curb Extension
■	■	■	Roof Curbs
■	■	■	Duct Adaptor
■	■	■	Weatherhood
■	■	■	Propane Gas
	■	■	Freezestat
	■	■	Discharge Diffuser
	■	■	Double Wall Construction
	■	■	Exhaust Fan Starter
		■	Variable Volume
		■	Recirculation
		■	Thru-Wall Mounting
	■	■	Evaporative Cooling
	■	■	Remote Control Panels
	■	■	115 volt Service Receptacle
■	■	■	Discharge Temperature Control
	■	■	Room Override
	■	■	Room Temperature Control
		■	DDC Interface

OPTIONAL EVAPORATIVE COOLING (DG & DGX)

The evaporative cooling section includes a galvanized steel housing with a louvered intake, 2 inch aluminum mesh filters and a stainless steel evaporative cooling module. The evaporative cooling media is Munters GLASdek and has a depth of 12 inches for 90% cooling effectiveness.

The entire section mounts directly to the front of the unit, eliminating transition or ductwork by others.

For complete product information refer to catalog Model DGK, Model DG or Model DGX, or contact your local representative. For roof opening dimensions and locations refer to the factory submittal/IOM.

C ETL US Direct Fired Gas Heat

Intertek

OPTIONAL REMOTE PANEL

Remote panels feature a variety of control switches and indicator lights mounted on a Permatector coated galvaneal steel box.

Direct Fire Gas - Models DGK, DG & DGX

COMBINATION PACKAGES - DG & DGX

The Greenheck combination kitchen package simplifies installation and reduces field labor costs. The pre-engineered design ensures that the supply fan, exhaust fan, curb and combination extension components interface properly.

Equally important, Greenheck combination packages are specifically designed to comply with NFPA 96.

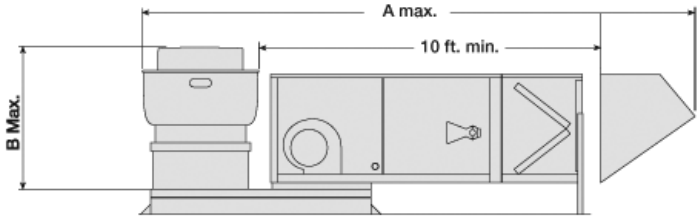

Combination Package - ***Arrangement DBC***

	Housing Size	ARR. DBC		
		A	B	Width
DGX Dimensions	H10	179	46	30
	H20	200	54	40
	H30	225	62	52
DG Dimensions	Housing Size	ARR. DBC		
		A	B	Width
	H12	171	46	33
	H22	225	54	44
	H32	261	62	52

All dimensions are in inches.

STAND ALONE ARRANGEMENTS - DGK, DG & DGX

Model DGK, DG and DGX are available for either downblast (Arrangement DB) or horizontal (Arrangement HZ) discharge. An upblast discharge (Arrangement UB) is also available on the DGX.

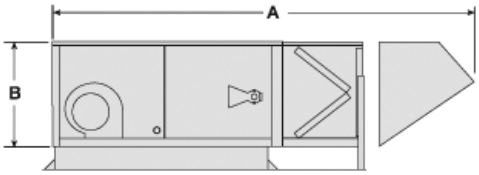

Downblast Discharge - ***Arrangement DB***

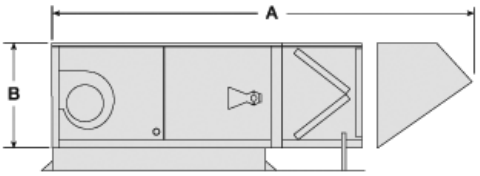

Horizontal Discharge - ***Arrangement HZ***

	Housing Size	ARR. DB/HZ		
		A	B	Width
DGK Dimensions	H15	108	30	32
	Housing Size	ARR. DB/HZ		
		A	B	Width
DG Dimensions	H10	131	34	28
	H20	148	34	36
	H30	160	42	48
	Housing Size	ARR. DB/HZ		
		A	B	Width
DGX Dimensions	H12	127	40	33
	H22	160	46	44
	H32	1920	49	52

All dimensions are in inches.

THRU-WALL INSTALLATION - DGX

Model DGX is available with a pre-engineered, thru-wall installation option, which is ideal when a roof penetration is not desirable.

Factory options that facilitate easy installation and ensure problem-free operation:

Weatherhood: A full down turn design with generous intake area to minimize intake velocity and moisture entrainment.

Thru-Wall Sleeve: Sleeve provides attachment interface between weatherhood and burner section. Accommodates walls up to 15 inches in depth.

Filter Section: Aluminum mesh media filters outdoor air and strips fine mist from the air. A drain pan weeps moisture out the front of the wall sleeve.

	Housing Size	THRU WALL MOUNT		
		A	B	Width
DGX Dimensions	H12	122	40	33
	H22	145	46	36
	H32	160	49	52

All dimensions are in inches.

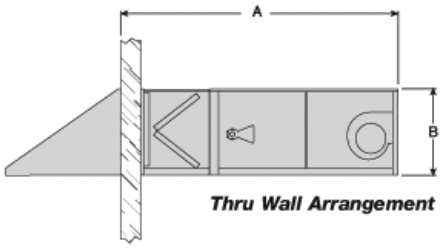

Thru Wall Arrangement

Consult your representative for dimensional data when the evaporative cooling option is selected. For roof opening dimensions and locations refer to the factory submittal.

GREENHECK

Indirect Gas-Fired Make-Up Air - IG and IGX

The Greenheck models IG and IGX feature 80% efficient indirect gas fired furnace(s) that are ETL listed. Heating capacity ranges from 75,000 to 1,200,000 BTU/hr and airflow volumes are available up to 15,000 cfm.

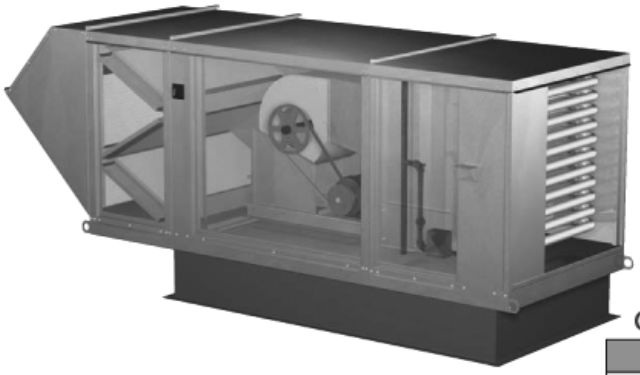

SERVICE CHART	10 DAY
IG - Housings 10, 20, 30	✔
IGX - Housings 12, 22, 32	✔

PERFORMANCE

Performance capabilities are 15,000 cfm with up to 2 in. of wg of static pressure.

STANDARD CONSTRUCTION FEATURES

- Power vented
- Galvanized steel construction
- Control center with starter and disconnect
- Vibration isolation
- Factory wired and tested
- ETL label
- V-bank filters
- ETL Listed for Indoor and Outdoor installation to ANSI Standard Z83.8 - 2002 and CGA Standard 2.6 -2002
- 80% thermal efficiency
- Electronic staged or modulating gas controls
- Direct spark ignition system
- Easy access burner controls
- Insulated double wall furnace section construction

COMBINATION PACKAGES

The Greenheck combination kitchen package (Arrangement DBC) simplifies installation and reduces field labor costs. The pre-engineered design ensures that the supply fan, exhaust fan, curb and combination extension components interface properly.

Equally important, Greenheck combination packages are specifically designed to comply with NFPA 96.

STAND ALONE ARRANGEMENTS

Models IG and IGX are available for either downblast (Arrangement DB) or horizontal (Arrangement HZ) discharge.

c ETL US Indirect Fired Gas Heat

Intertek

For complete product information refer to catalog Model IG or Model IGX, or contact your local representative.

OPTIONS AND ACCESSORIES

	IG	IGX
Aluminized Steel Heat Exchanger	■	■
Stainless Steel Heat Exchanger	■	■
Air Filter Gauge	■	■
Motorized Damper	■	■
Exhaust Fan Starter(s)	■	■
Inlet Air Sensor	■	■
Evaporative Cooling	■	■
115V Service Receptacle	■	■
Roof Curb	■	■
Freezestat	■	■
Propane Gas	■	■
Duct Adapter	■	■
Double Wall Construction	■	■
Gas Pressure Regulator	■	■
Mixing Box	■	■
Evaporative Cooling	■	■
Remote Control Panel(s)	■	■
Modulation Control (4:1, 2:1 turndown)	■	■
Staged Control (8:1, 2:1 turndown)	■	■
DDC Temperature Control	■	■

OPTIONAL EVAPORATIVE COOLING

The evaporative cooling section includes a galvanized steel housing with a louvered intake, 2 inch aluminum mesh filters and a stainless steel evaporative cooling module. The evaporative cooling media is Munters CELdek or GLASdek with a depth of 12 inches for 90% cooling effectiveness.

The entire section mounts directly to the front of the unit, eliminating transition or ductwork by others.

IG Dimensional Data

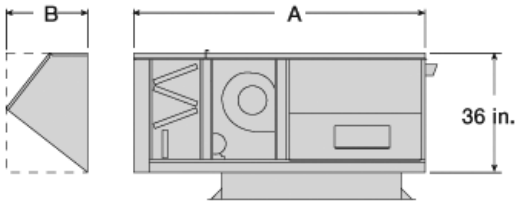

Stand Alone - Arrangement DB/HZ

Housing Size	ARR. DB/HZ		
	A	B	Width
H10	90	26	44
H20	93	26	53
H30	102	26	53

Dimensions are in inches and include mixing box and standard weatherhood. For roof opening dimensions and locations refer to factory submittal.

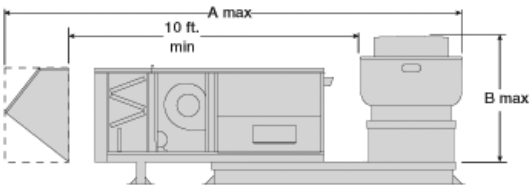

Combination Package - Arrangement DBC

Housing Size	ARR. DBC		
	A	B	Width
H10	182	56	48
H20	183	56	53
H30	181	56	53

Dimensions are in inches.

For roof opening locations refer to factory submittal/IOM. Consult your representative for dimensional data when the evaporative cooling option is selected.

IGX Dimensional Data

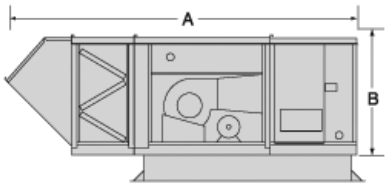

Stand Alone - Arrangement DB/HZ

Housing Size	ARR. DB/HZ		
	A	B	Width
H12	122	40	33+
H22	140*	46	44
H32	173*	49	52

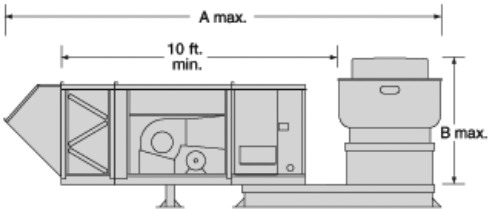

Combination Package - Arrangement DBC

Housing Size	ARR. DBC		
	A	B	Width
H12	166	46	33+
H22	206*	54	44
H32	242*	62	52

All dimensions are in inches.
* "A" dimension for units with only one furnace. Add 33 in. for each additional furnace.
+ Furnace section width is 44 in. for 200 MBH and 250 MBH furnace sizes.

Indirect Fired Gas Heat

Intertek

Consult your representative for dimensional data when the evaporative cooling option is selected.

GREENHECK®

Ceiling Exhaust Belt Drive - BDF

Model BDF are belt drive duct fans. These fans are designed for low sound levels in supply, exhaust or ducted return applications. Forward curved wheels provide high efficiency with low sound levels.

SERVICE CHART	3 DAY	10 DAY
BDF - All models and sizes	✓	✓

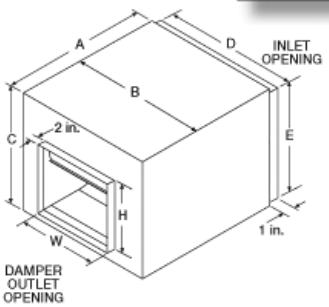

PERFORMANCE

Performance capabilities range from 400 cfm to 17,000 cfm and up to 2.5 in. wg of static pressure.

STANDARD CONSTRUCTION FEATURES

- Galvanized steel housing and forward curved wheel
- Side access panels
- Motor and drive frame isolated on shock mounts
- Inlet and outlet duct connection flanges
- Ball bearing motors
- Fan shafts mounted in ball bearings
- Adjustable motor pulley
- Fan shaft pulley
- Static resistant belts

OPTIONS AND ACCESSORIES

- UL/cUL 705 Electrical
- Insulation
- Filter boxes
- Gravity and motorized dampers
- External isolators
- Dual drives
- Greenheck coatings
- Top horizontal mounting arrangement

BDF STANDARD PERFORMANCE & DIMENSIONAL DATA

MODEL	A	B	C	DAMPER OUTLET OPENING (WxH)	INLET OPENING (DxE)	MIN/MAX CFM	SONES @ .25 in.	PERFORMANCE IN INCHES WG 0	.25	.75	1.25	1.75
BDF-80	23¼	18½	15⅞	9¾ x 8⅞	15 3/16 x 12 11/16	400	4.7	373	717			
						1100	10.8	1025	1183	1404	1660	
BDF-90	24¼	21¼	18¾	12¼ x 10½	18¼ x 15⅞	800	4.1	334	584			
						1850	11.4	771	884	1113	1318	1506
BDF-100	26¼	22¾	20¾	13¾ x 11⅞	19¾ x 17⅞	950	4.9	303	515			
						2150	11.0	686	747	960	1155	
BDF-120	33	27¼	22¾	16 x 13⅜	24⅛ x 19⅞	1250	4.9	247	433			
						3050	13.3	604	645	815	985	
BDF-150	34¾	32⅝	27¾	19⅛ x 16⅜	28⅝ x 23⅞	2200	5.7	289	382			
						4900	18.7	643	686	769	853	977
BDF-180	40¼	41¾	31¾	22½ x 18⅞	37½ x 27⅞	3000	5.7	189	321			
						7200	18.8	453	508	621	732	831
BDF-200	50¼	49¼	39¾	23⅛ x 25¼	45⅛ x 36	5000	12.5	222	310	464		
						17000	42	755	783			

All dimensions in inches.
Performance certified is for installation type D: Ducted inlet, Ducted outlet. Power rating (BHP/kW) does not include transmission losses.
Performance ratings do not include the effects of appurtenances (accessories).
The sound ratings shown are loudness values in fan sones at 5 ft. (1.5 m) from the test inlet duct in a hemispherical free field calculated per AMCA Standard 301. Values shown are for installation type D: ducted inlet, ducted outlet. Ratings do not include the effects of duct end correction.

For complete product information refer to catalog Model BDF, or contact your local representative.

Greenheck Fan Corporation certifies that the BDF models shown herein are licensed to bear the AMCA Seal. The ratings shown are based on tests and procedures performed in accordance with AMCA Publication 211 and AMCA Publication 311 and comply with the requirements of the AMCA Certified Ratings Program.

BDF Model is listed for Electrical (UL/cUL 705 with TEFC motor only. File no. E40001.)

c UL® US LISTED

GREENHECK®

Supply Air Fan - SAF

The SAF (Supply Air Fan) is a roof mounted, non-tempered, filtered, belt driven make-up air unit. This cost effective forward curved supply fan performs similar to the RSF and KSFB. Housing is straight sided heavy gauge galvanized steel.

SERVICE CHART	IN STOCK	10 DAY
SAF-110 through 118	✓	✓
SAF-120		✓

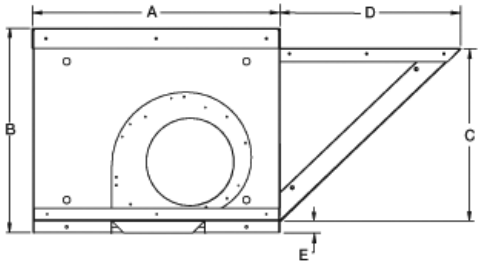

PERFORMANCE

Performance capabilities range from 725 to 14,000 cfm and up to 3.5 in. wg of static pressure.

SAF STANDARD CONDENSED PERFORMANCE & DIMENSIONAL DATA

■ *Performance for available IN STOCK SIZES is shown on page 29*

MODEL	A	B	C	D	E	RECOMMENDED ROOF OPENING	STOCK SIZES (■)	CFM	PERFORMANCE IN INCHES WG							
									.125	.25	.5	1	1.5	2.5	3	3.5
SAF-110	30	25	21 1/16	22	1½	16½ x 16½	■	820	432	549						
								1720	688	757	883	1110	1307			
								2620	977	1032						
SAF-112	34	32 1/16	27 3/8	29¼	2	20½ x 20½	■	1250	390	483						
								3000	697	743	843	1026	1179			
								3750	849	888	962					
SAF-115	34	32 1/16	27 3/8	29¼	2	26½ x 26½	■	1300	316	407	546					
								2350	432	498	610	800	952	1139		
								4800	780	815						
SAF-118	40	36 1/16	31 1/16	32	2	32½ x 32½	■	2500	294	359	466					
								5500	514	550	620	743	851	1042	1134	
								8500	760	786	831					
SAF-120	46	48 1/16	44 1/16	35 13/16	2 1/8	38½ x 38½		4000	275	325	414	553				
								9000	513	538	591	687	772	928	995	1060
								14000	772	791						

All dimensions in inches. Performance certified is for installation type A: Free inlet, Free outlet. Power rating (BHP) does not include transmission losses. Performance ratings include the effects filters in the airstream.

For complete product information refer to catalog Model SAF, or contact your local representative.

Greenheck Fan Corporation certifies that the SAF models shown herein are licensed to bear the AMCA seal. The ratings shown are based on tests and procedures performed in accordance with AMCA Publication 211 and AMCA Publication 311 and comply with the requirements of the AMCA Certified Ratings Program. The certified ratings for Model SAF is shown on pages 28 through 29.

UL/cUL 705
E40001 - SAF

c UL US LISTED

GREENHECK

Supply Air Fan - SAF

STANDARD CONSTRUCTION FEATURES

- Heavy gauge galvanized steel housing
- Double width, double inlet forward curved wheel
- Removable cover allows complete accessibility to blower assembly
- 1 inch washable aluminum filters, easily removable for cleaning
- Vibration isolation for entire blower assembly
- AMCA Certified Ratings Seal for Sound and Air Performance
- Mounted and wired Nema-1 disconnect switch
- Lifting lugs
- Energy efficient motor
- UL/cUL 705 Electrical

OPTIONS AND ACCESSORIES

- Duct adaptors (In Stock)
- Curb adaptors
- Gravity and motorized dampers (In stock)
- High velocity supply dampers
- Galvanized roof curbs (In stock)
- Aluminum roof curbs (See pages 114-115)
- Curb extensions
- Replacement filter sets
- Curb seal
- Curb adapter/reducer

Order stock products online at www.greenheck.com/gd

SAF PERFORMANCE DATA - IN STOCK

IN STOCK SIZES are galvanized steel construction and include washable aluminum filters. UL/cUL 705.

MODEL	CFM	OV	MAX BHP		PRESSURE IN INCHES WG							
					.125	.25	.5	1	1.5	2	2.5	3
SAF-110-LMDX-QD	820	877	0.08	RPM	432	549						
	1180	1263	0.22	RPM	525	616	780					
	1540	1658	0.55	RPM	632	707	844	1082				
	1900	2033	1.02	RPM	745	809	927	1140	1328			
	2260	2418	1.05	RPM	859	920	1023	1210				
	2620	2803	0.97	RPM	977	1032						
SAF-112-LMDX-QD	1250	1850	0.11	RPM	390	483						
	1750	2590	0.31	RPM	459	549	682					
	2250	3330	0.49	RPM	549	615	745					
	2750	4070	1.04	RPM	647	698	810	990				
	3250	4810	1.45	RPM	748	790	880	1063				
	3750	5550	1.5	RPM	849	888	962					
SAF-115-LMDX-QD	1300	2717	0.23	RPM	316	407	546					
	2000	4180	1.05	RPM	387	463	586	781	934			
	2700	5643	1.89	RPM	479	534	642	821	970	1098		
	3400	7106	1.91	RPM	577	621	712	870	1011			
	4100	8569	2.04	RPM	677	717	785	935				
	4800	10032	1.96	RPM	780	815						
SAF-118-LMDX-QD	2500	7400	0.37	RPM	294	359	466					
	3700	10952	1.67	RPM	376	426	516	664	800			
	4900	14504	4.46	RPM	466	508	582	713	828	932	1034	1127
	6100	18056	4.73	RPM	563	594	661	775	878	973	1059	
	7300	21608	4.63	RPM	662	688	744	846	939			
	8500	25160	4.64	RPM	760	786	831					

Performance certified is for Model SAF exhaust for installation type A: Free inlet, Free outlet. Power rating (BHP) does not include transmission losses. Performance ratings include the effects of filters in the airstream.

The sound ratings shown are loudness values in fan sones at 5 ft. (1.5 m) in a hemispherical free field calculated per AMCA Standard 301. Values shown are for installation type A: Free inlet fan sone levels.

GREENHECK

Insulated Control Damper

ICD-45 damper is typically used in applications where it is necessary to minimize the transfer of heat or cold penetration and reduce condensation.

STANDARD CONSTRUCTION FEATURES

- Aluminum hat channel frame thermally broken with two polyurethane resin gaps and insulated on four sides with polystyrene
- Thermally broken aluminum airfoil blades with polyurethane foam
- Silicone blade and jamb seals
- Dual bearing with acetal inner sleeve and flanged outer bearing

SERVICE CHART	10 DAY
ICD-45	

AMCA CERTIFIED RATINGS AIR PERFORMANCE

Greenheck Fan Corporation certifies that the model ICD-45 shown herein is licensed to bear the AMCA Seal. The ratings shown are based on tests and procedures performed in accordance with AMCA Publication 511 and comply with the requirements of the AMCA Certified Ratings Programs. The AMCA Certified Ratings Seal applies to air performance ratings only.

Manual Balancing Dampers

Greenheck's Manual Balancing Dampers are designed to regulate flow of air in an HVAC system. They are used to accomplish system balancing. Each damper is equipped with a locking quadrant which fixes the damper blades in place after adjustment. These dampers are not intended to be used in applications as a positive shut off or for automatic control.

STANDARD CONSTRUCTION FEATURES

- Galvanized Steel
- Fabricated to your size requirements

SERVICE CHART	NEXT DAY	3 DAY	10 DAY
SINGLE BLADE - MBD-10, 10 M	✓	✓	✓
MULTI BLADE - MBD-15	✓	✓	✓
ROUND BLADE - MBDR-50*	✓	✓	✓

*NOTE: MBDR-50 STOCK SIZES AVAILABLE…
Round Blade - 6, 8, 10, 12 - in WI and CA.

OPTIONS AND ACCESSORIES

- Stand-off brackets (accommodates for the additional thickness of insulated duct)
- Bronze bushings (MBD-15 only)
- Factory sleeves (MBD-15 only) -
  (20 Ga.): 16, 21, 24 inches
  (16 Ga.): 16, 21 inches
  (14 Ga.): 16, 21 inches
- Transitions - oval, round, and rectangular (MBD-15 only)

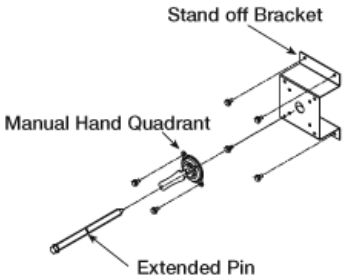

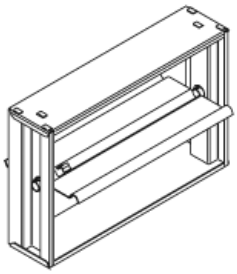

EXPLODED VIEW OF STANDOFF BRACKET

MA609X - High Performance Louver

Architectural Blade Louvers
4" (102 mm) Deep

Visible Mullion Louver Type:	MA609X
Material:	Extruded Aluminum (Alloy 6063-T6)
Stationary Blade:	.064" (1.6 mm)
Jambs:	.081" (2.0 mm)
Head and Sill:	.064" (1.6 mm)
Louver Depth:	4" (102 mm)
Blade Angle:	45° at center
Free Area - 4' x 4' Unit:	9.37 sq.ft. (0.871 sq.m.)
Percent Free Area:	58.6%

Optional: 1 1/2 [38] Flanges

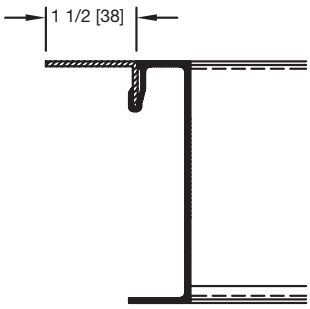

Section Size Limits		
	Minimum	Maximum
Width	6 (152)	72 (1829)
Height	8 (203)	144 (3658)
Area		60 SQ.FT. (5.58 SQ.M.)

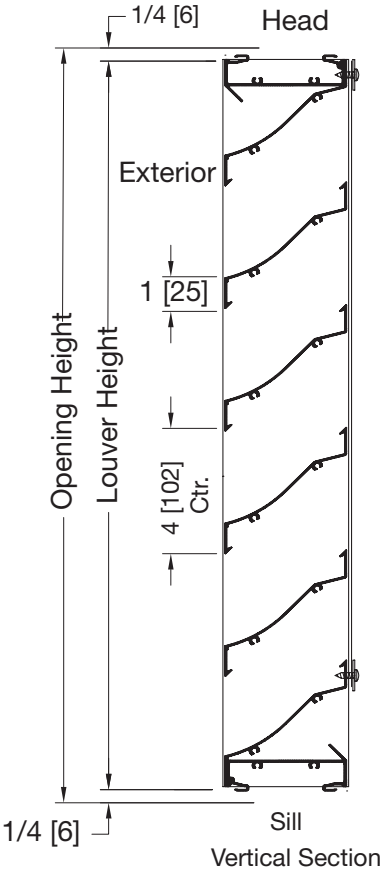

Vertical Section

Features:

- Screw assembled construction: #10 x 1" plated steel screws.
- Constructed with 14 ga. reinforced aluminum blades.
- Nominal 59% free area (based on 48" x 48").
- Integral perimeter caulking stop.
- Optional 1.5" flanges available as add-ons.
- Optional bird screens available.
- Optional baked enamel finish; available in Brown, White, Grey and Mill finishes.

MA6774X - High Performance Louver

Drainable Blade Louvers
4" (102 mm) Deep

Visible Mullion Louver Type:	MA6774X
Material:	Extruded Aluminum (Alloy 6063-T6)
Stationary Blade:	.064" (1.6 mm)
Jambs:	.081" (2.0 mm)
Head and Sill:	.064" (1.6 mm)
Louver Depth:	4" (102 mm)
Blade Angle:	45º at center
Free Area - 4' x 4' Unit:	9.00 sq.ft. (0.836 sq.m.)
Percent Free Area:	56.2%

Optional: 1 1/2 [38] Flanges

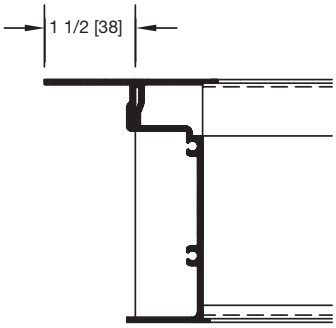

Section Size Limits		
	Minimum	Maximum
Width	6 (152)	72 (1829)
Height	8 (203)	144 (3658)
Area		60 SQ.FT. (5.58 SQ.M.)

Features:

- Screw assembled construction: #10 x 1" plated steel screws.
- Constructed with 14 ga. reinforced aluminum blades.
- Nominal 56% free area (based on 48" x 48").
- Integral perimeter caulking stop.
- Optional 1.5" flanges available as add-ons.
- Optional bird screens available in Mill finish.

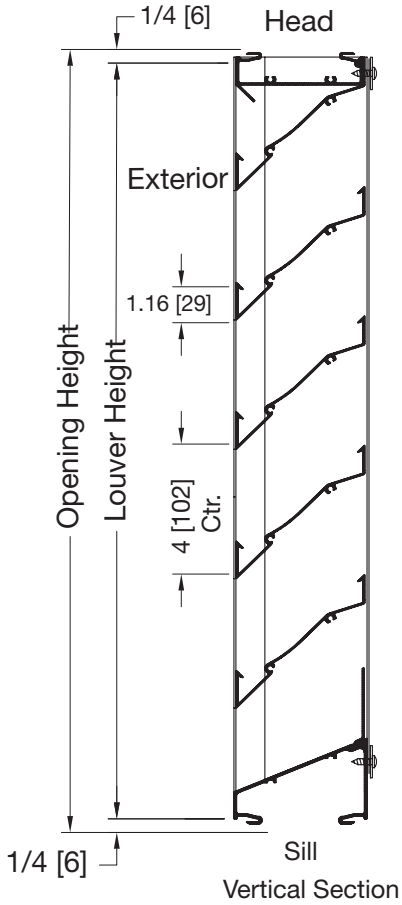

Vertical Section

FIRE DAMPERS - Curtain Type

FD-VA
Vertical, In the Airstream Fire Damper

6 x 6	18 x 12
8 x 8	18 x 18
10 x 10	20 x 12
12 x 8	20 x 20
12 x 12	24 x 4
14 x 10	24 x 12
14 x 14	24 x 14
16 x 8	24 x 24
16 x 16	

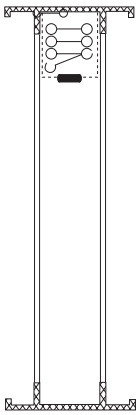

FD-HA
Horizontal, In the Airstream Fire Damper

6 x 6	14 x 14	20 x 12
8 x 8	16 x 8	20 x 20
10 x 10	16 x 16	24 x 12
12 x 6	18 x 12	24 x 24
12 x 12	18 x 18	

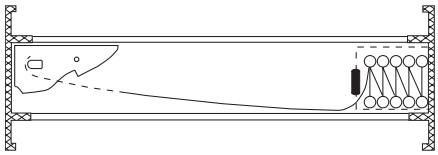

FD-VB
Vertical, Out of the Airstream Fire Damper

6 x 4	14 x 14
6 x 6	16 x 10
8 x 6	16 x 12
8 x 8	16 x 16
10 x 6	18 x 4
10 x 8	18 x 6
10 x 10	18 x 18
12 x 8	20 x 20
12 x 10	24 x 12
12 x 12	24 x 16
14 x 4	24 x 24
14 x 10	

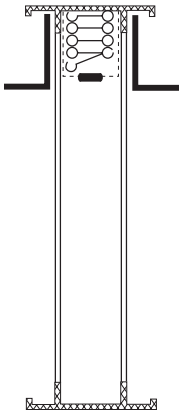

FD-HB
Horizontal, Out of the Airstream Fire Damper

6 x 6	12 x 12	18 x 18
8 x 8	14 x 14	20 x 12
10 x 10	16 x 8	20 x 20
12 x 6	16 x 16	24 x 12
12 x 10	18 x 12	24 x 24

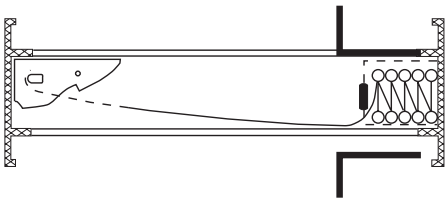

FD-VC
Round, Vertical, Out of the Airstream Fire Damper

4"	10"
5"	12"
6"	14"
7"	16"
8"	

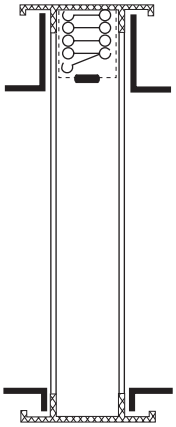

FD-HC
Round, Horizontal, Out of the Airstream Fire Damper

4"	7"	12"
5"	8"	14"
6"	10"	16"

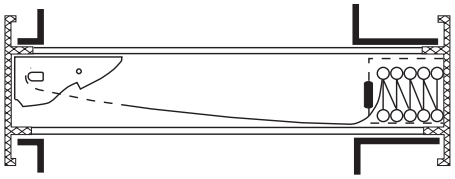

CDRD - Ceiling Fire Stop Flaps

Round Ceiling Dampers are available in two models, butterfly-type (non-asbestos) or the same with adjustable volume controller.

Damper Size	Diameter	Height
6	6	3.5
8	8	3.5
10	10	3.5
12	12	3.5
14	14	3.5

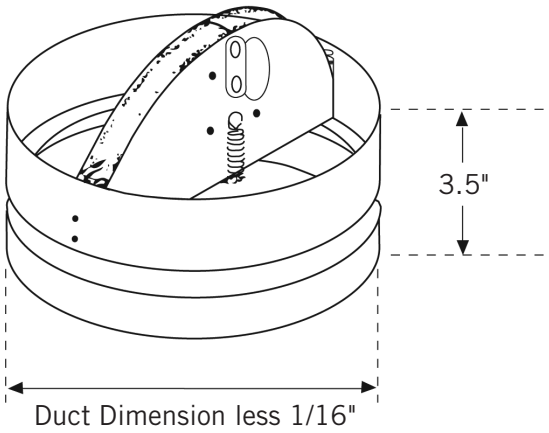

CFS - Ceiling Fire Stop Flaps

Square and Rectangular Ceiling Dampers are available in two models, square or rectangular, non-asbestos.

Damper Size	Length	Width	Height
12 x 12	12	12	3.75
24 x 12	24	12	3.75
24 x 24	24	24	3.75

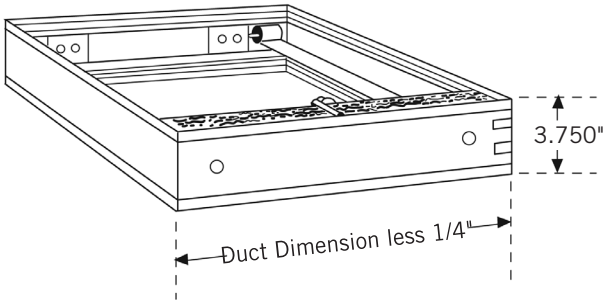

Thermal Blankets

Lightweight, non-asbestos fabric can be wasily installed in the field. Allows for ceiling openings larger than duct size.

Thickness	Fan Model & Size
1/8"	CK-200-1
1 1/4"	CK-2000-1-B

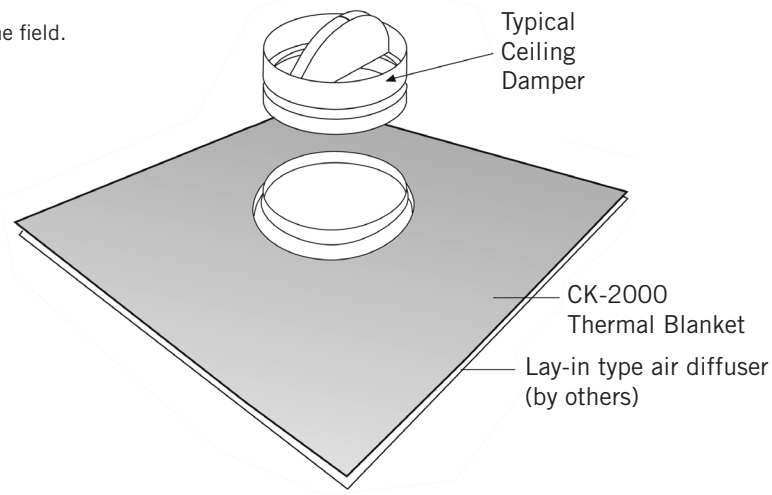

Oval Access Doors

Model	Dimensions (approx)
AD0805	8 x 5
AD1206	12 x 6
AD1810	18 x 10
AD2214	22 x 14
AD2618	26 x 18

BELIMO - Actuators

BELIMO ACTUATORS
Two Position, Spring Return Actuators

- LF 120 (35 in-lb Torque)
- NF 120 (60 in-lb Torque)
- AF 120 (133 in-lb Torque)
- LF 120-S (c/w END SWITCH)
- NF 120-S (c/w END SWITCH)
- AF 120-S (c/w END SWITCH)

BELIMO ACTUATORS
Modulating SPRV

- LF24-SR-S (35 in-lb Torque) c/w END SWITCH
- NF24-SR-S (60 in-lb Torque) c/w END SWITCH
- AF24-MFT-S (133 in-lb Torque) c/w END SWITCH

HONEYWELL - Actuators

HONEYWELL ACTUATORS
Fast-Acting, Two-Position Actuators for Fire/Smoke Applications

- ML 4115A1009
- ML 4115B1008
- ML 8115A1005B
- ML 8115A1004
- MS 4209F
- MS 4120F1204

Note:
Other models are available upon request.

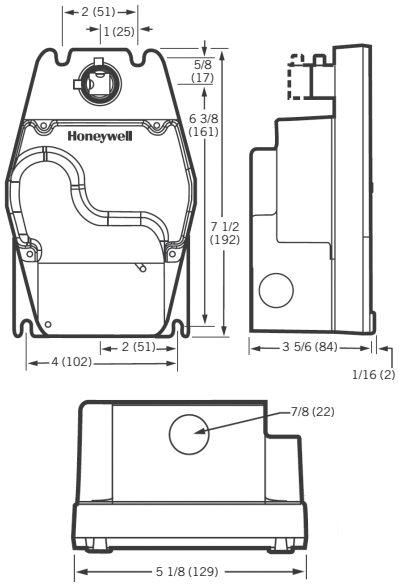

ML Series

MS Series

MODEL SHAB - Kinetics Light Duty Spring Isolators

Standard Ratings				Spring Coil		
Type	Size	Load	Defl.	Color	Free HT.	O.D.
SHAB	15	15	.047	BLUE	1.50	1.23
SHAB	30	30	.056	GRAY	1.50	1.23
SHAB	50	50	.046	SILVER	1.50	1.23
SHAB	70	70	.045	GREEN	1.50	1.23

SHAB Spring Isolation Hangers Light Duty

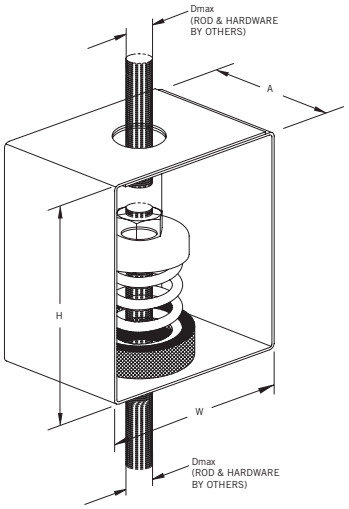

- Consists of freestanding, laterally stable steel springs in series with a molded elastomeric element assembled into a stamped and welded hanger bracket
- Brackets are zinc plated and incorporate color-coded spring elements
- Spring element has a minimum lateral spring stiffness of 1.0 times the rated vertical stiffness
- The hanger brackets will carry a 500% overload without failure

MODEL SH - Kinetics Spring Isolators

Model	Spring Colour	Rated Load LB/KG	Rated Deflection (mm)
SH-1-35	BLUE	35/16	1.52/37
SH-1-70	GREEN	70/32	1.36/35
SH-1-125	GRAY	125/57	1.25/32
SH-1-245	BROWN	245/111	1.19/30
SH-1-370	ORANGE	370/168	1.00/25
SH-1-500	BEIGE	500/227	1.00/25
SH-1-600	CHROME	600/273	1.00/25
SH-1-700	BEIGE/WHITE	700/318	1.00/25
SH-1-805	CHROME/WHITE	805/366	1.00/25

SH Spring Isolation Hangers

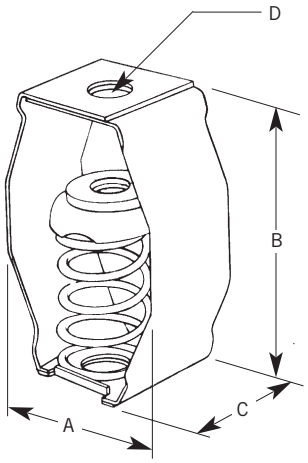

- Consists of free-standing, laterally stabile steel spring and elastomeric washer in series, assembled in a stamped or welded steel bracket.
- Bracket shall be finished with an epoxy-based powder coating
- Hanger bracket designed to carry a 500% overload without failure

Honeywell E³ Point - Toxic and Combustible Gas Detector Standalone Platform

Honeywell E³ Point

Honeywell

General Specifications	
Uses	Wall or duct-mounted gas detector for monitoring carbon monoxide (CO), nitrogen dioxide (NO_2), oxygen (O_2), methane (CH_4), hydrogen (H_2), hydrogen sulphide (H_2S), and propane (C_3H_8), installed as a standalone device with single-gas or dual-gas monitoring. **(Note: E³Point standalone version replaces Vulcain models VA201T, VA201M and VA301M)**
Size	20.56 x 14.90 x 6.72cm (8.09 x 5.87 x 2.65") (H x W x D); Remote Sensor: 3.5 x 4.5 x 6.5 cm (1.36 x 1.75 x 2.56")
Power Requirement	24 Vac nominal (17-27Vac), 50/60 Hz, 0.4A; 24Vdc nominal (20-38Vdc); with remote sensor: 7 W max.
Optional Main AC Input	120Vac nominal, +/- 10% (with on-board transformer)
Relay Output	2 DPDT relays, 5A @ 250Vac; 5A @ 30Vdc
Communications	4-20mA
Operating Environment	Commercial, Indoor, Extreme Temperature Environments
Operating Temperature	H_2S, NO_2, O_2, CH_4, H_2, C_3H_8: -40 to 50ºC (-40 to 122ºF) CO: -20 to 50ºC (-4 to 122ºF); future available CO version: -40 to 50ºC (-40 to 122ºF)
Sensor Type	Electrochemical cell (CO, NO_2, H_2S, O_2); catalytic (CH_4, H_2, C_3H_8,)
Display	8 character, 2 line backlit LCD
Visual Indicators	Green LED: Power Amber LED 1: Alarm/Fault Amber LED 2: Alarm/Fault
Audible Alarm	85 dBA at 3 m (10 ft)
Accuracy	+/- 3% of full scale @ 25 C

Detection Ranges and Alarm Levels

Gas	Resolution	Range	Alarm A	Alarm B	Alarm C
CO (Carbon monoxide)	1 ppm	0-250 ppm	25 ppm	200 ppm	225 ppm
H_2S (Hydrogen sulfide)	0.1 ppm	0-50 ppm	10 ppm	15 ppm	20 ppm
NO_2 (Nitrogen dioxide)	0.1 ppm	0-16 ppm	0.7 ppm	2 ppm	9 ppm
O_2 (Oxygen)	0.1% vol.	0-25% vol.	19.5% vol.	22% vol.	22.5% vol.
H_2 (Hydrogen)	0.5% LEL	0-100% LEL	25% LEL	50% LEL	90% LEL
CH_4 (Methane)	0.5% LEL	0-100% LEL	25% LEL	50% LEL	90% LEL
C_3H_8 (Propane)	0.5% LEL	0-100% LEL	25% LEL	50% LEL	90% LEL

Enclosure	
	Polycarbonate

Certification	
	CSA C22.2 No. 61010-1, UL 61010-1; FCC part 15; ICES-003 issue 4

Honeywell E^3 Point - Toxic and Combustible Gas Detector Standalone Platform

Honeywell
E^3 Point

Honeywell

ORDERING INFORMATION

Single-Gas Configuration: Base Unit, Surface-Mount

**** Base unit and sensor cartridge sold together ** Base unit only; sensor cartridge sold separately***

Part Number	Description
E3SASCO*	E^{3}Point, CO sensor cartridge, Surface-mount, 24Vac/dc, -20 to 50ºC (-4 to 122ºF)
E3SA**	E^{3}Point, Surface-mount, 4-20mA, 24Vac/dc, -40 to 50ºC (-40 to 122ºF)
E3SAHSCO*	E^{3}Point, CO sensor cartridge, Surface-mount, 120Vac, -20 to 50ºC (-4 to 122ºF)
E3SAH**	E^{3}Point, Surface-mount, 4-20mA, 120Vac, -40 to 50ºC (-40 to 122ºF)

Dual-Gas Configuration: Base Unit w/Remote Sensor Capability, Surface-Mount

Part Number	Description
E3SARSCO*	E^{3}Point, CO sensor cartridge, Surface-mount, 24Vac/dc, Dual-mode, -20 to 50ºC (-4 to 122ºF)
E3SAR**	E^{3}Point, Surface-mount, 4-20mA, 24Vac/dc, Dual-mode, -40 to 50ºC (-40 to 122ºF)
E3SARHSCO*	E^{3}Point, CO sensor cartridge, Surface-mount, 120Vac, Dual-mode, -20 to 50ºC (-4 to 122ºF)
E3SARH**	E^{3}Point, Surface-mount, 4-20mA, 120Vac, Dual-mode, -40 to 50ºC (-40 to 122ºF)

Remote Sensors (always sold with sensor cartridge included)

Part Number	Description
E3SRMCO	E^{3}Point, Remote Sensor, -20 to 50ºC (-4 to 122ºF), Carbon Monoxide
E3SRMNO2	E^{3}Point, Remote Sensor, -20 to 50ºC (-4 to 122ºF), Nitrogen Dioxide
E3SRMH2S	E^{3}Point, Remote Sensor, -20 to 50ºC (-4 to 122ºF), Hydrogen Sulfide
E3SRMH2	E^{3}Point, Remote Sensor, -20 to 50ºC (-4 to 122ºF), Hydrogen
E3SRMO2	E^{3}Point, Remote Sensor, -20 to 50ºC (-4 to 122ºF), Oxygen
E3SRMM	E^{3}Point, Remote Sensor, -20 to 50ºC (-4 to 122ºF), Methane
E3SRMP	E^{3}Point, Remote Sensor, -20 to 50ºC (-4 to 122ºF), Propane

Stand-Alone Platform, Duct-Mount

Part Number	Description
E3DASCO*	E^{3}Point, CO, Duct-mount, 24Vac/dc, -20 to 50ºC (-4 to 122ºF)
E3DA**	E^{3}Point, Duct-mount, 4-20mA, 24Vac/dc, -40 to 50ºC (-40 to 122ºF)

Sensor Cartridges

Part Number	Description
E3SCO	CO Cartridge -20 to 50ºC (-4 to 122ºF), Carbon Monoxide
E3NO2	NO_2 Cartridge -40 to 50ºC (-40 to 122ºF), Nitrogen Dioxide
E3H2S	H_2S Cartridge -40 to 50ºC (-40 to 122ºF), Hydrogen Sulfide
E3H2	H_2 Cartridge -40 to 50ºC (-40 to 122ºF), Hydrogen
E3O2	O_2 Cartridge -40 to 50ºC (-40 to 122ºF), Oxygen
E3M	CH_4 Cartridge -40 to 50ºC (-40 to 122ºF), Methane
E3P	C_3H_8 Cartridge -40 to 50ºC (-40 to 122ºF), Propane

EXAMPLES OF HOW TO ORDER

To order a stand-alone version, surface-mount, analog, CO detector, -20 to 50ºC (-4 to 122ºF): Order E3SASCO

To order a stand-alone version, surface-mount, analog, dual-gas CO + NO_2, -20 to 50ºC (-4 to 122ºF): Order E3SARSCO + E3SRMNO2

To order a stand-alone version, duct-mount, analog, propane detector, -40 to 50ºC (-40 to 122ºF): Order E3DA + E3P

To order a stand-alone version, surface-mount, analog, dual-gas CO + C_3H_8, 120Vac, -20 to 50ºC (-4 to 122ºF): Order E3SARHSCO + E3SRMP

Honeywell E^3 Point - Toxic and Combustible Gas Detector Standalone Platform

The VA 301EM-20 acts as a controller for up to 20 remote sensors and suits a variety of gas detection system solutions for Mechanical Rooms.

User Friendly
- Easy to read LCD display
- Auto-diagnostic capabilities

Economical Solution
- Cost-effective answer for installation in Mechanical Rooms locations

Flexible Operation
- Able to operate with up to 20 remote sensors at a time
- Various types of sensors available to simultaneously detect a range of different Refrigerant, Toxic and Combustible gases
- Robust and reliable RS-485 Modbus communication

Output Adaptability
- Three 24 Vdc alarm outputs and four 4-20 mA outputs

Safety Measures
- Four fully programmable relays
- Three alarm levels with built-in visual indicators and audible alarm

Beneficial Options
- Convenient stand-alone or network operation

Particularly configured to meet ASHRAE 15, B-52 and International Mechanical Code requirements, the VA301EM is commonly used to optimize gas detection in mechanical and chiller rooms. A full complement of sensors (including toxic, oxygen, combustible gases and a full line of refrigerant sensors), horns, strobes and remote panels provide added flexibility to suit a variety of gas detection system solutions.

ASHRAE No 15 Mechanical Standard and B-52 Code Compliance

The ASHRAE and B-52 security standards have been established to minimize risk and protect the safety of mechanical room personnel and the environment at large. Available in a special configuration, the VA301EM mechanical room controller has been carefully designed to meet and even exceed these rigorous standards. The VA 301EM can be configured to offer automatic fan, horn and strobe activation in addition to manual fan activation. Latching relay for manual alarm recognition, silence key for manual horn deactivation, built-in 24 Vdc outputs for horn operation, and 2 breakglass switch accessories for manual alarm activation ensure optimal performance.

General Specification				
Use	Wall mounted mechanical room controller for use with Honeywell Analytics range of gas sensors. Four (4) onboard relays can be used to activate alarms or deactivate equipment.			
Power Requirement	22-27 Vac, 29-38 Vdc, 2A max @ 29Vdc			
Size	28 x 20.3 x 7 cm (11.02 x 7.99 x 2.73 in.)			
Weight	1.02 kg (2.25 lb.)			
Distance Between Controller and Sensor	VA301IRFS refrigerant sensors: Up to 200 ft. / 60.9 m S301D2 toxic/combustible sensors: Up to 500 ft. / 152.4 m			
Visual Indicators	Normal Operation Alarm Level 1 Alarm Level 2 Alarm Level 3 Signal Tx Failure Indication	Green LED Red LED Red LED Red LED Blinking amber LED Yellow LED		
Alarm Levels	3 with high and low setpoints			
Outputs	4 DPDT relays (alarms and/or fault), buzzer Three 24 Vdc, 250 mA (per output) Four 4-20 mA outputs Modbus RFS option: 24 Vdc built-in red strobe RFSA option: 24 Vdc built-in red strobe & 105 dBA horn			
Relay Output Rating	5 A, 30 Vdc or 250 Vac (resistive load)			
Gases Detected	Gases Detected	Detection Range	Operating Temperature	Operating Humidity Range
	VA301IRFS			
	R11, R12, R22, R123, R125, R134A, R227, R245A, R404A, R407C, R410A, R507A, R508B	0-1000 ppm	0 to 40 °C (32 to 104°F)	0-95% non-condensing
	Gases Detected	Detection Range	Operating Temperature	Operating Humidity Range
	S301D2			
	Hydrogen Sulfide (H_2S) Carbon Monoxide (CO) Oxygen (O_2) Nitrogen Dioxide (NO_2) Sulfur Dioxide (SO_2) Combustibles - Catalytic	0-50 ppm 0-250 ppm 0-25% 0-10 ppm 0-10 ppm 0-100% LEL	-40 to 40ºC (-40 to 104ºF) -20 to 40ºC (-4 to 104ºF) -20 to 40ºC (-4 to 104ºF) -20 to 40ºC (-4 to 104ºF) -20 to 40ºC (-4 to 104ºF) -40 to 50ºC (-40 to 122ºF)	0 - 90% RH, non-condensing 0 - 90% RH, non-condensing 5 - 95% RH, continuous 15 - 90% RH, non-condensing 15 - 90% RH, non-condensing 0 - 80% RH, non-condensing
	EC-F9-NH3			
	Ammonia NH3	0-100 ppm	-50 to 120 C (ATMOS)	5-100% RH
	Accuracy is +/- 3 % for IFRS and D2 sensors. +/- 5 % for EC-F9 sensor			
Ratings and Certifications				
Certified to	CAN/CSA C22.2 No. 61010-1 ETL 116662			
Conforms to	ANSI/UL 61010-1			

MODEL APU - Carroll Ecology Unit - Grease / Pollution Control Exhauster

EnvironAir®

Applications

The EnvironAir® APU is available in a variety of configurations to meet the foodservice operators requirements for the elimination of particulate grease, smoke, and/or odor from the kitchen exhaust air stream. Integrated or stand alone modules are available for the blower/fan, filter, and odor control functions of the system. Installation can be in a ceiling space above the kitchen ventilator, or in a remote location such as a utility room, or on the roof top. The EnvironAir® APU provides the foodservice operator an economical solution to problems which in the past would have prevented the installation of a commercial kitchen operation. EnvironAir® solves the problems associated with the following installation problems:

- **NEW HIGH-RISE BUILDINGS**

EnvironAir® provides the economical solution to the cost of running expensive 16 gauge all welded ductwork to the roof of new high rise buildings. The cleaned kitchen exhaust air from the EnvironAir® unit can be exhausted out the side of the building at a minimum 10' (3 meters) above ground level or into another area of the building such as an underground parking garage. In the United States all ductwork is required to be 16 gauge all welded steel.

- **EXISTING HIGH-RISE BUILDINGS**

EnvironAir® is the solution to running kitchen exhaust duct work in existing buildings where it is impossible or cost prohibitive to run all welded ductwork to the roof. The cleaned kitchen exhaust air from the EnvironAir® unit can be exhausted out the side of the building at a minimum 10' (3 meters) above ground level or into another area of the building such as an underground parking garage. In the United States all ductwork is required to be 16 gauge all welded steel.

- **MALL OPERATIONS WITH FOOD COURTS**

EnvironAir® provides pollution control for new and existing Mall Food Court operations and the flexibility for future expansion of the system. Multiple hoods and APU filter sections can be joined to common odor control and blower sections of the system.

- **KITCHEN EXHAUST ODOR ABATEMENT**

EnvironAir® will effectively control the malodors produced from commercial cooking operations when equipped with the optional Odor Control Section. This option addresses the problems of commercial kitchens located near residential areas or areas that are under pollution control requirements from their local Air Quality Management District or other local authorities.

- **REDUCED DUCTWORK COST IN CANADA**

In Canada, and in conjunction with the EnvironAir® ULC Listing, all exhaust ductwork downstream of the filter section can be installed with standard HVAC requirements (non-welded, galvanized, standard clean air installation). Exhaust air can be discharged at levels other than rooftop (i.e. side wall or parking garage), thereby eliminating costly continuously welded horizontal and vertical duct runs and fire barrier chases. Ductwork from the hood to the inlet of the EnvironAir® unit is required to be 16 gauge all welded steel.

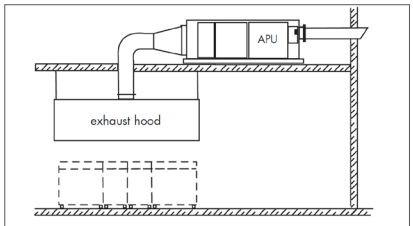

Indoor / Horizontal Supported

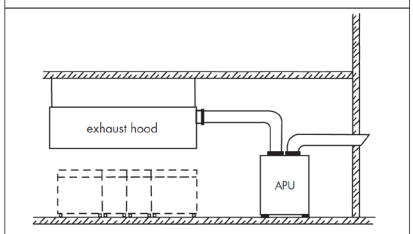

Indoor / Vertical Supported

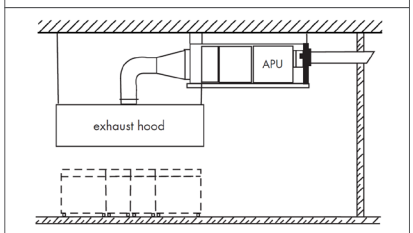

Indoor / Horizontal Suspended

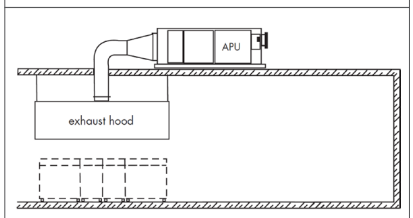

Outdoor / Horizontal Roof Mounted

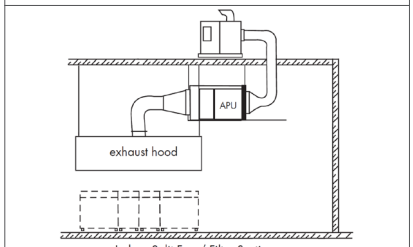

Indoor Split Fan / Filter Sections

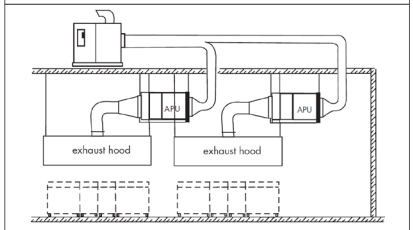

Indoor Split Fan / Multiple Filter Sections
(Mall Applications)

BAS-1P

1Ø Building Automation Starter

1Ø, 110~240VAC, 0.1–1HP
HOA, Status, Lockable Disconnect
Adjustable Wide Range Overload

The Universal 1Ø Starter for Smart Buildings

On/Off Disconnect Switch with Recessed Hand/Auto Modes

- Concealed Hand/Auto switch discourages tampering
- Lockable motor-rated On/Off switch meets safety regulations
- Meets UL/NEC/NFPA service disconnect requirements when properly installed
- LED indicator lights for power, run and fault

Run Status Verification

- Integrated current sensing confirms motor operational status
- Quickly and accurately pinpoint malfunctioning equipment

Voltage & Dry Inputs for Auto Run Command

- Wire directly from the automation system to the starter, no interposing relays necessary
- Save on installation costs and increase reliability.

System Override Mode (Fireman's, Occupancy or Manual)

- Initiates smoke purge sequence during emergency situations for safety and code compliance or use for occupancy sensor run input (dry contact)

Wide Range Class 10 Electronic Overload

- Prevents ordering confusion and eliminates call backs due to mis-sized heaters.
- Advanced protective features including anti-cycling, manual/auto reset, etc.

Standard Single Gang Box Installation

- Easy to install in any location
- Surface or flush mount capability

High Reliability

- Heavy duty motor-rated switch and control relay
- No thermal elements to fail
- All units include a 5-Year warranty
- UL 508A Listed

CERUS - Building Automation Starters

BAS

UL Type 1 Ordering and Sizing Information

- UL Type 1 for indoor use
- Lockable cover prevents unauthorized access/tampering
- Standard conduit knock-outs top and bottom for easy installation
- Combination version features motor circuit protector to provide branch and short circuit protection.

UL Type 1 *Indoor Enclosure*

Standard Magnetic H-O-A Starters *-Electronic Overload*

HP				SCIC KAIC @460V	NEMA Size				
Three Phase					00	0	1	2	3
200V	230V	460V	575V*		BAS Part Number				
1	1.5	3	3	5	BAS1-9/J-5				
3	5	10	15	5		BAS1-18/J-22			
7.5	10	20	25	5			BAS1-32/J-40		
15	15	30	50	5				BAS1-50/J-80	
20	25	50	60	10					BAS1-85/J-80

UL Type 1 *Indoor Enclosure*

Combination Magnetic H-O-A Starters *- Electronic Overload*

HP				SCIC KAIC @460V	NEMA Size				
Three Phase					00	0	1	2	3
200V	230V	460V	575V*		BAS Part Number				
–	–	3/4	3/4	65	BAS1-9/J-G1.6-5	BAS1-18/J-G1.6-5			
1/2	1/2	1	1.5	65	BAS1-9/J-G2.5-5	BAS1-18/J-G2.5-5			
3/4	3/4	2	36	65	BAS1-9/J-G4-5	BAS1-18/J-G4-5			
1	1.5	3	3	65	BAS1-9/J-G6-5	BAS1-18/J-G6-5			
2	2	5	5	65		BAS1-18/J-G8-22			
2	3	5	7.5	65		BAS1-18/J-G10-22			
3	3	7.5	10	65		BAS1-18/J-G13-22			
3	5	10	15	30		BAS1-18/J-G17-22	BAS1-32/J-G17-40		
5	7.5	15	20	30			BAS1-32/J-G22-40		
7.5	7.5	15	20	30			BAS1-32/J-G26-40	BAS1-50/J-G26-80	
7.5	10	20	25	30			BAS1-32/J-G32-40	BAS1-50/J-G32-80	
10	10	30	30	50				BAS1-50/J-G40-80	BAS1-85/J-G40-80
15	15	30	40	50				BAS1-50/J-G50-80	BAS1-85/J-G50-80
20	20	40	50	50					BAS1-85/J-G63-80
20	25	50	60	50					BAS1-85/J-G75-80

e.h.price

ONTARIO SALES OFFICES

LONDON SALES OFFICE
6-2351 Huron St.
London, ON N5V 0A8

Ph: 519.451.5100 Fax: 519.451.8726
Email: london@ehpricesales.com
Website: www.ehpricesouthwesternontario.com

CAMBRIDGE SALES OFFICE
75 Saltsman Drive, Unit 8
Cambridge, ON N3H 4R7

Ph: 519.653.9470 Fax: 519.653.7853
Email: cambridge@ehpricesales.com
Website: www.ehpricesouthwesternontario.com

HAMILTON SALES OFFICE
70 Unsworth Drive, Unit #11
Hamilton, ON L8W 3K4

Ph: 905.383.3599 Fax: 905.383.1274
Email: hamilton@ehpricesales.com
Website: www.ehpricehamilton.com

TORONTO SALES OFFICE
571 Chrislea Road, Unit 3
Woodbridge, ON L4L 8A2

Ph: 905.669.8988 Fax: 905.669.8023
Email: toronto@ehpricesales.com
Website: www.ehpricetoronto.com

OSHAWA SALES OFFICE
500 Wentworth Street East, Unit 12
Oshawa, ON L1H 3V9

Ph: 905.669.8988 Fax: 905.669.8023
Email: oshawa@ehpricesales.com
Website: www.ehpriceoshawa.com

OTTAWA SALES OFFICE
3236 Hawthorne Road
Ottawa, ON K1G 3W9

Ph: 613.725.2029
Email: ottawa@ehpricesales.com
Website: www.ehpriceottawa.com

Product Improvement is a continuing endeavour at Price. Therefore, specifications are subject to change without notice. Consult your Price sales representative for current specifications or more detailed information.

Warranty: The Company warrants and guarantees that all goods within this brochure that have been manufactured by the Company have been manufactured in accordance with the specifications published herein and will be free from defects in material and workmanship for a period of twelve (12) months from the Bill of Lading issued by the Company. The Company will replace defective product at its option, but will not be responsible for labor or material charges in replacing product or consequential damages. Any installation not conforming with the Company's specifications, manuals, bulletins or instructions or any misuse or any modification not authorized by the Company voids this warranty. This warranty is in lieu of all Provincial, State, and Federal statutory warranties and the conditions herein are in substitution and replacement of which warranties, statutory or otherwise.

LOCAL DELIVERY AVAILABLE

CONTACT YOUR LOCAL E.H. PRICE REPRESENTATIVE FOR MORE INFORMATION

E.H. Price, a division of Price Industries Limited.

Lithographed in Canada 2015

AIR DISTRIBUTION PRODUCTS FOR WORLD CLASS CITIES

www.ehpricesales.com