VENTILATION series fans

Features

A quiet revolution is forming...GNN Air fans are high-performance fans that operate with super-low noise levels. GNN is giving affordable silence for home-owners.

- **Adjustable Steel Hanger Rods**
  Place the fan anywhere in the joist cavity and secure to the structure at four corners
- **Steel Housing w/Powder Coat Finish**
  Strong no-rust housing
- **Low Wattage Motors**
  Low power requirements, continuous duty
- **4-inch Exhaust**
  Low air resistance and low noise operation
  Easy to secure to duct work
- **High Performance Blower**
  Large blower wheel quietly moves air
- **Weighted Backdraft Damper**
  No clicking dampers
- **Contemporary Grill Design**
  Stylish and easy to clean

Models and Specifications

These are the current models offered by GNN Air. This brochure contains the detailed specifications of these high- quality, long lasting, low-energy fans

Model	CFM	Sones (noise)
BPT12-02A	50	1.0
BPT12-14A	70	.8
BPT15-14A1	80	1.0
BPT15-24A1	110	1.5
BPT15-34A	160	2.0

GNN Air ventilation fans are certified by the Home Ventilating Institute and by the Canadian Standards Association.

Model **BPT12-02A**

50 cfm 1.0 sone HVI 120 volts 0.24 amps

50 Ceiling Fans

Housing

The fan body is constructed from premium steel. Powder coated. Hanger rods are provided to secure the housing to the building structure. The housing includes a 4" steel duct collar and internal noise free back draft damper

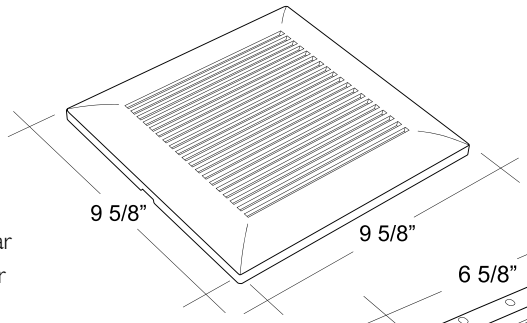

Vertical Blower

The ball bearing sirocco blower and low RPM, capacitor style continuous duty motor provide high performance, low noise, and no maintenance.

Grill

The grill is mounted without tools, using an extra winding on the mounting spring to ensure a positive fit to the ceiling.

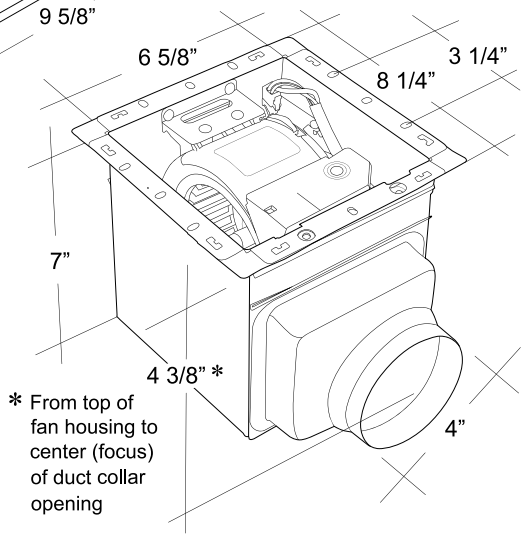

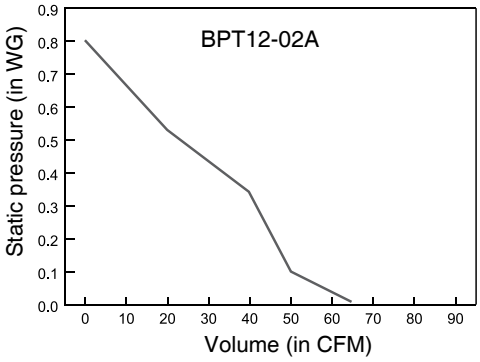

- **Typical Specification**

The fan shall be GNN model BPT12-02A. The fan shall have a powder coated steel housing. Hanger rod Mounted with Steel exhaust collar. The fan shall be ducted in accordance with the authority having jurisdiction.The fan shall include an built in back draft damper with a rubber stopper to ensure noise free operation. The blower to be balanced to operate at low rpm. Air delivery shall be rated in accordance with HVI standards. 50 cfm at 0.1"sp. The fan in accordance and certified by CE, CSA, HVI, AMCA and ISO 9001.

GNN warrants equipment for 1 year to original registered end user. The equipment shall be free from manufacturing defects. Warranty shall be limited to replacement parts or equipment replacement. In keeping with a policy of continuous research the specifications may change without notice.

Project		Architect	
Location		Engineer	
Contractor		Submitted by	

Model **BPT12-14A**

70 cfm .8 sone HVI 120 volts 0.25 amps

70 Ceiling Fans

Housing

The fan body is constructed from premium steel. Powder coated. Hanger rods are provided to secure the housing to the building structure. The housing includes a 4" steel duct collar and internal noise free back draft damper.

Vertical Blower

The ball bearing sirocco blower and low RPM, capacitor style continuous duty motor provide high performance, low noise, and no maintenance.

Grill

The grill is mounted without tools, using an extra winding on the mounting spring to ensure a positive fit to the ceiling.

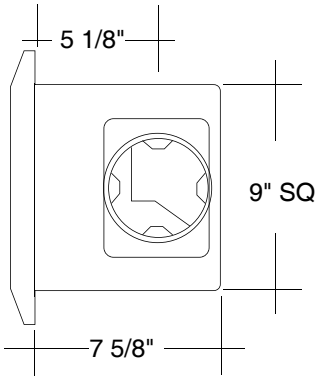

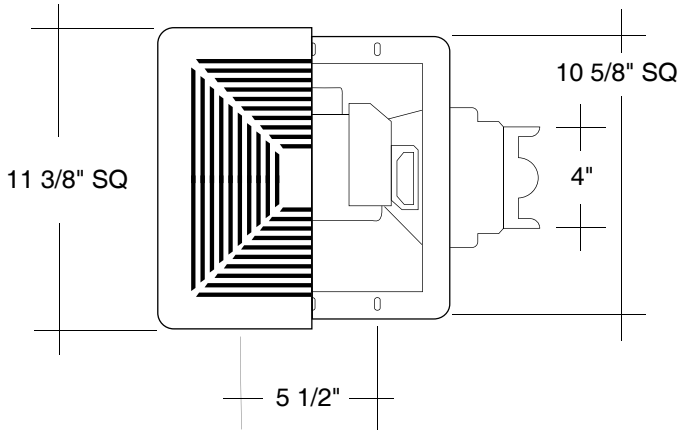

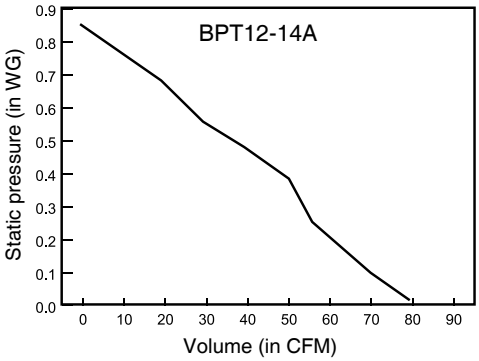

- **Typical Specification**

The fan shall be GNN model BPT12-14A. The fan shall have a powder coated steel housing. Hanger rod Mounted with Steel exhaust collar. The fan shall be ducted in accordance with the authority having jurisdiction.The fan shall include an built in back draft damper with a rubber stopper to ensure noise free operation. The blower to be balanced to operate at low rpm. Air delivery shall be rated in accordance with HVI standards. 70 cfm at 0.1"sp. The fan is built in accordance and certified by CE, CSA, HVI, AMCA and ISO 9001.

GNN warrants equipment for 1 year to original registered end user. The equipment shall be free from manufacturing defects. Warranty shall be limited to replacement parts or equipment replacement. In keeping with a policy of continuous research the specifications may change without notice.

Project		Architect	
Location		Engineer	
Contractor		Submitted by	

GNN GENUIN

Model **BPT15-14AI**

80 cfm 1.0 sone HVI 120 volts 0.25 amps

80 Ceiling Fans

- Housing

Constructed from premium steel Powder coated, hanger rod mounting secures the housing to the structure. Steel 4" duct collar

- Vertical Blower

The sirocco blower assembly and Continuous duty motor provide High performance, low noise, capacitor style continuous dutymotor is designed for low RPM and no maintenance. Ball bearing mounted fan.

- Grill

Torsion mounting. Installs without tools extra winding ensure a positive fit to ceiling

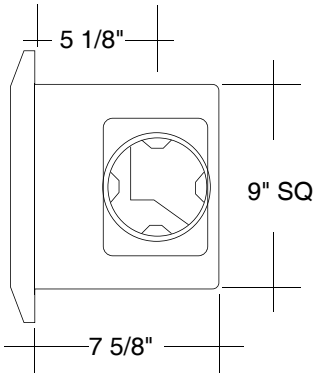

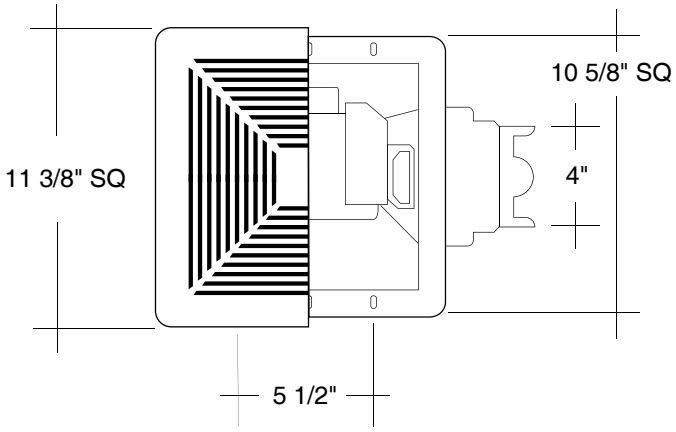

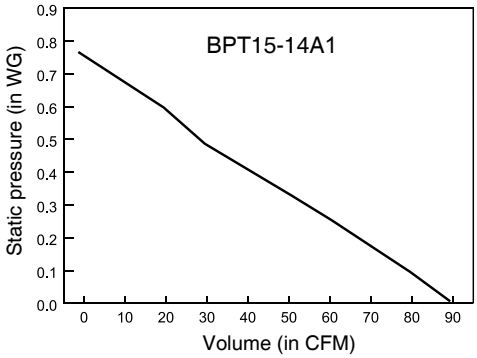

- Typical Specification

The fan shall be GNN model BPT15-14AI. The fan shall have a powder coated steel housing. Hanger rod Mounted with Steel exhaust collar. The fan shall be ducted in accordance with the authority having jurisdiction.The fan shall include an built in back draft damper with a rubber stopper to ensure noise free operation. The blower to be balanced to operate at low rpm. Air delivery shall be rated in accordance with HVI standards. 80 cfm at 0.1"sp. The fan is built in accordance and certified by CE, CSA, HVI, AMCA and ISO 9001.

GNN warrants equipment for 1 tear to original registered end user. The equipment shall be free from manufacturing defects. Warranty shall be limited to replacement parts or equipment replacement. In keeping with a policy of continuous research the specifications may change without notice.

Project		Architect	
Location		Engineer	
Contractor		Submitted by	

Model **BPT15-24A1**

110 cfm 1.5 sone HVI 120 volts 0.43 amps

110 Ceiling Fans

Housing

The fan body is constructed from premium steel. Powder coated. Hanger rods are provided to secure the housing to the building structure. The housing includes a 6" steel duct collar and internal noise free back draft damper.

Vertical Blower

The ball bearing sirocco blower and low RPM, capacitor style continuous duty motor provide high performance, low noise, and no maintenance.

Grill

The grill is mounted without tools, using an extra winding on the mounting spring to ensure a positive fit to the ceiling.

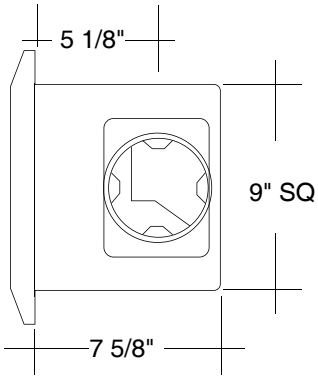

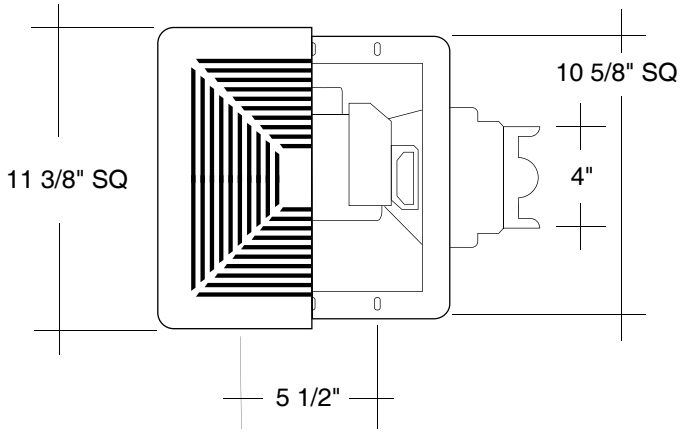

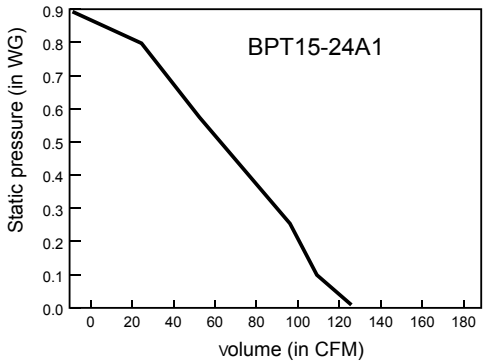

- **Typical Specification**

The fan shall be GNN model BPT15-24A1. The fan shall have a powder coated steel housing. Hanger rod Mounted with Steel exhaust collar. The fan shall be ducted in accordance with the authority having jurisdiction.The fan shall include an built in back draft damper with a rubber stopper to ensure noise free operation. The blower to be balanced to operate at low rpm. Air delivery shall be rated in accordance with HVI standards. 110 cfm at 0.1"sp. The fan is built in accordance or certified by CE, CSA, HVI, AMCA and ISO 9001.

GNN warrants equipment for 1 year to original registered end user. The equipment shall be free from manufacturing defects. Warranty shall be limited to replacement parts or equipment replacement. In keeping with a policy of continuous research the specifications may change without notice.

Project		Architect	
Location		Engineer	
Contractor		Submitted by	

Model **BPT15-34A**

160 cfm 2.0 sone HVI 120 volts 0.34 amps

160 Ceiling Fans

Housing

The fan body is constructed from premium steel. Powder coated. Hanger rods are provided to secure the housing to the building structure. The housing includes a 6" steel duct collar and internal noise free back draft damper

Vertical Blower

The ball bearing sirocco blower and low RPM, capacitor style continuous duty motor provide high performance, low noise, and no maintenance.

Grill

The grill is mounted without tools, using an extra winding on the mounting spring to ensure a positive fit to the ceiling.

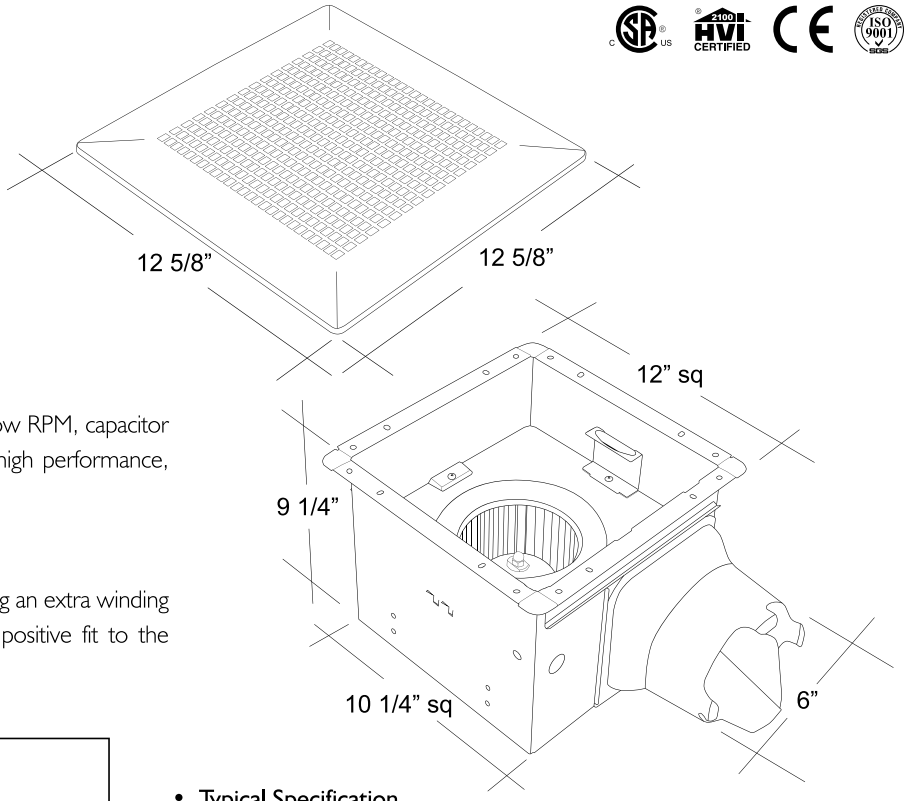

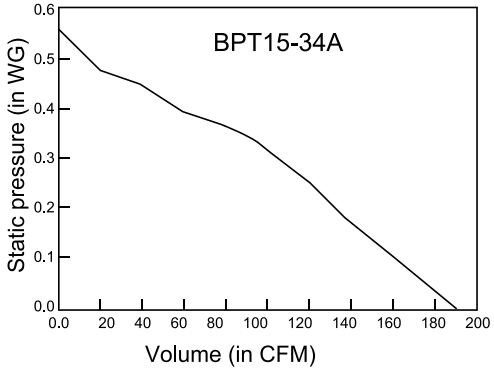

- **Typical Specification**

The fan shall be GNN model BPT15-34A. The fan shall have a powder coated steel housing. Hanger rod Mounted with Steel exhaust collar. The fan shall be ducted in accordance with the authority having jurisdiction.The fan shall include an built in back draft damper with a rubber stopper to ensure noise free operation. The blower to be balanced to operate at low rpm. Air delivery shall be rated in accordance with HVI standards. 160 cfm at 0.1"sp. The fan is built in accordance and certified by CE , CSA, HVI, AMCA and ISO 9001.

GNN warrants equipment for 1 year to original registered end user. The equipment shall be free from manufacturing defects. Warranty shall be limited to replacement parts or equipment replacement. In keeping with a policy of continuous research the specifications may change without notice.

Project		Architect	
Location		Engineer	
Contractor		Submitted by	

NOTES:

e.h.price

GNN GENUIN

KELOWNA SALES OFFICE
#130-397 Penno Road
Kelowna, BC V1X 7W5
Ph: 250.765.7226 Fax: 250.765.7224
Email: kelowna@ehpricesales.com
Website: www.ehpricekelowna.com

WINNIPEG SALES OFFICE
101 Elan Boulevard
Winnipeg, MB R2J 4H1
Ph: 204.982.2222 Fax: 204.663.9102
Email: winnipeg@ehpricesales.com
Website: www.ehpricewinnipeg.com

THUNDER BAY SALES OFFICE
636 Squier Street
Thunder Bay, ON P7B 4A8
Ph: 807.622.3311 Fax: 807.622.0744
Email: thunderbay@ehpricesales.com
Website: www.ehpricethunderbay.com

LOCAL DELIVERY AVAILABLE | CONTACT YOUR E.H.PRICE SALES REPRESENTATIVE FOR MORE INFORMATION

e.h.price CANADIAN HEAD OFFICE

638 Raleigh Street
Winnipeg, Manitoba Canada R2K 3Z9
Ph: 204.669.4220 Fax: 204.663.2715
www.ehpricesales.com

- Canadian Head Office, Laboratory & Manufacturing Facilities in Winnipeg, Manitoba
- Sales Offices or Representation in all major Canadian cities

Specifications are subject to change without notice.
Consult your E.H. Price sales representative for current specifications or more detailed information.

Warranty: The Company warrants and guarantees that all goods within this brochure that have been manufactured by the Company have been manufactured in accordance with the specifications published herein and will be free from defects in material and workmanship for a period of twelve (12) months from the Bill of Lading issued by the Company. The Company will replace defective product at its option, but will not be responsible for labor or material charges in replacing product or consequential damages. Any installation not conforming with the Company's specifications, manuals, bulletins or instructions or any misuse or any modification not authorized by the Company voids this warranty. This warranty is in lieu of all Provincial, State, and Federal statutory warranties and the conditions herein are in substitution and replacement of which warranties, statutory or otherwise.

E.H. Price, a division of Price Industries Limited **Lithographed in Canada 2013**

AIR DISTRIBUTION PRODUCTS FOR WORLD CLASS CITIES